duma rent
www.duma-rent.com

TEUPEN®
...access redefined
since '77

Serial number: _____

Translation of the original operating instructions

Aerial access platform

LES 27 T LES 31 T LES 35 T

© 2017 Teupen GmbH

TEUPEN ...access redefined since '77

Doku-BA T-Serie LEO27_35T_EN_00 201928

Manufacturer:
TEUPEN Maschinenbau GmbH
Marie-Curie-Straße 13
48599 Gronau, Germany
☎: +49 (0) 2562 8161-0
🖷: +49 (0) 2562 8161-888
✉: info@teupen.com
🌐: www.teupen.com

Service:
☎ : +49 (0) 2562 8161-313
✉ : service@teupen.com

© TEUPEN Maschinenbau GmbH 2015

Table of contents

1 General ... 7
1.1 Information about these instructions ... 7
1.2 Explanation of symbols ... 8
1.3 General symbol explanations ... 9
1.4 Limitation of liability ... 11
1.5 Copyright ... 11
1.6 Warranty conditions ... 11
1.7 Notes regarding the warranty card ... 11
1.8 Product trainings ... 12

2 EC Declaration of Conformity ... 13

3 Safety ... 15
3.1 Basic hazards ... 15
3.1.1 General hazards in the work station ... 15
3.1.2 Hazards due to electric energies ... 16
3.1.3 Hazards due to mechanical elements ... 18
3.1.4 Hazards due to hydraulic energies ... 19
3.1.5 Hazards due to high temperatures ... 20
3.1.6 Hazards due to chemicals ... 20
3.1.7 Hazards due to traffic and vehicles ... 22
3.2 Proper use ... 23
3.3 Responsibility of the owner ... 24
3.4 Personnel requirements ... 25
3.4.1 Qualification ... 25
3.4.2 Unauthorised Persons ... 26
3.4.3 Training ... 26
3.5 Personal protective equipment ... 27
3.6 Safety equipment ... 28
3.6.1 Position of the safety equipment ... 28
3.6.2 Description of safety equipment ... 30
3.7 Symbols on the machine ... 33
3.8 How to act in case of fire or accidents ... 34
3.9 Environmental protection ... 34

4 Technical data ... 37
4.1 Dimensions ... 37
4.2 Work diagrams ... 38
4.2.1 Aerial lift platform work diagram ... 38
4.3 Power ... 38
4.4 Weights and loads ... 39
4.5 Drives ... 39
4.5.1 Combustion engine ... 39
4.5.2 Electric motor ... 39
4.6 Emission ... 39
4.7 Operating conditions ... 40
4.8 Consumables ... 40
4.9 Filling quantities ... 42

Table of contents

4.10 Type plate ... 43

5 Construction and function ... 45

5.1 Overview ... 46
5.1.1 Brief description ... 47

5.2 Assembly description ... 48
5.2.1 Crawler chassis ... 48
5.2.2 Outriggers ... 48
5.2.3 Platform ... 49
5.2.4 Working basket ... 49
5.2.5 Movable basket boom ... 49
5.2.6 Combustion engine ... 50
5.2.7 Electric motor ... 50

5.3 Operating elements and displays ... 51
5.3.1 Outrigger latching ... 51
5.3.2 Control panel and radio control ... 53
5.3.3 Control panel adjustment (optinal) ... 55
5.3.4 Combustion engine controller ... 56
5.3.5 Control box control panels ... 57
5.3.6 Emergency control ... 58

5.4 Electrical connections ... 58
5.4.1 Feed ... 58
5.4.2 Power sockets, working basket ... 59

5.5 Work areas and danger zones ... 59

5.6 Accessories ... 60
5.6.1 Accessories (optional) ... 60
5.6.2 Accessories (included) ... 62

6 Transportation and storage ... 63

6.1 Safety instructions for transportation ... 63

6.2 Inspection on receipt of delivery ... 63

6.3 Attachment points ... 64

6.4 Storage ... 66

6.5 Transportation on an auxiliary frame for trucks ... 67
6.5.1 Loading onto the truck ... 67
6.5.2 Lashing ... 68

7 Operation ... 71

7.1 Safety instructions for operation ... 71

7.2 Connecting the machine to the mains supply ... 71

7.3 Switching the machine on/off ... 73
7.3.1 Switching the radio control on/off ... 73
7.3.2 Switching the machine on/off via the mains supply ... 75
7.3.3 Switching the machine on/off using the combustion engine ... 75

7.4 Shutting down in case of emergency ... 77

7.5 Principles of the graphic display screen ... 78
7.5.1 Overview ... 78
7.5.2 Possible assignment of the function keys ... 78
7.5.3 Examples of the operating modes ... 79
7.5.4 Main menu ... 81
7.5.5 Machine data ... 81
7.5.6 Service hotline ... 82
7.5.7 Settings ... 82

7.6 Driving the machine ... 87

Table of contents

7.6.1 Driving the machine using the controls ... 89
7.6.2 Driving the machine along a slope ... 91
7.6.3 Driving the machine over ridges ... 92
7.6.4 Driving the machine up inclines ... 93
7.7 Adjusting the telescopic boom support ... 94
7.7.1 Adjusting the telescopic boom support using the control box (optional) ... 94
7.7.2 Adjusting the telescopic boom support using the radio control ... 96
7.8 Moving the working basket into the work position (optional) ... 98
7.8.1 Moving the working basket to the work position using the control box ... 99
7.8.2 Moving the working basket to the work position using the radio control ... 100
7.9 Moving the bracing into the work position ... 101
7.9.1 Adjusting a bracing ... 102
7.9.2 Adjusting a bracing ... 104
7.10 Operating the bracing ... 106
7.10.1 Manual bracing ... 107
7.10.2 Automatic bracing ... 109
7.11 Adjusting and operating the outriggers for bracing ... 111
7.12 Crawler chassis, height- and width-adjustable ... 113
7.12.1 Hydraulic crawler adjustment ... 113
7.12.2 Tips and recommendations for adjusting the crawler chassis hydraulically ... 115
7.13 Operating the platform assembly ... 116
7.14 Memory function ... 120
7.14.1 Storing the working basket position ... 121
7.14.2 Moving the working basket into a stored position ... 122
7.15 Moving the platform assembly into transport position ... 123
7.15.1 Moving the platform assembly into transport position manually ... 124
7.15.2 Moving the platform assembly to the transport position using the home function ... 125
7.16 Moving the bracing into the transport position ... 126
7.16.1 Moving the bracing into transport position manually ... 127
7.16.2 Moving the bracing into the transport position automatically ... 129
7.16.3 Moving the bracing to the transport position using the home function ... 130
7.17 Removing/mounting the working basket ... 131
7.17.1 Removing the working basket ... 131
7.17.2 Installing the working basket ... 133
7.18 Lifting device ... 134
7.18.1 Mounting/removing the lifting device ... 135
7.18.2 Operating the lifting device ... 137
7.19 Filling the fuel tank ... 139
7.20 Emergency operation ... 140
7.20.1 Platform assembly in emergency mode ... 140
7.20.2 Bracing in emergency mode ... 144
7.20.3 Crawler chassis in emergency mode ... 147
7.21 Service mode ... 153
7.21.1 Switching the machine on/off for service mode ... 154
7.21.2 Platform assembly in service mode ... 156
7.21.3 Outrigger operation in service mode ... 159
7.21.4 Crawler chassis in service mode ... 162
7.22 12-V auxiliary drive ... 166
7.23 Stowage space ... 167
7.23.1 Opening the stowage space ... 167
7.23.2 Locking the stowage space ... 168
7.24 Changing/charging the radio control's batteries ... 169

Table of contents

7.25 Checking the main battery's capacity ... 171
7.26 Charging the main battery ... 172
7.27 Jump-starting ... 174
7.28 Control panel adjustment (optional) ... 176
7.29 Locks ... 177
7.29.1 Resetting the combination on the shackle lock ... 177
7.29.2 Combination lock on control panel ... 178

8 Maintenance ... 179
8.1 Safety instructions for maintenance ... 179
8.2 Maintenance work ... 183
8.2.1 Cleaning the machine ... 183
8.2.2 Tensioning the chain ... 184
8.2.3 Checking/topping up hydraulic oil ... 186
8.2.4 Draining hydraulic oil ... 187
8.2.5 Replace the hydraulic filter ... 188
8.2.6 Checking the gear oil for the crawler chassis ... 191
8.2.7 Lubricating the boom sections and ropes ... 193
8.2.8 Lubricating the rotating assembly ... 195
8.2.9 Tightening torques for rotating assembly ... 196
8.2.10 Winter operation ... 196
8.2.11 Drive units overview ... 197
8.3 Maintenance schedule ... 199
8.4 Maintenance work on the auxiliary frame for trucks ... 202
8.4.1 Checking the lighting system ... 203
8.4.2 Frame attachment ... 203
8.4.3 Tightening torques ... 203
8.4.4 Checking attachment points ... 204
8.5 Maintenance schedule, auxiliary frame for trucks ... 205

9 Faults ... 207
9.1 Safety instructions for fault clearance ... 207
9.2 Fault table ... 211
9.3 Error code list ... 215
9.4 Changing fuses or circuit breakers ... 222
9.4.1 Fuse assignment ... 223
9.5 Notes about the crawler track ... 227
9.6 Information messages ... 228

10 Disposal ... 229

11 Appendix ... 231
11.1 Circuit diagram ... 233
11.2 Hydraulics diagram ... 235
11.3 Adhesive label folder ... 237
11.4 Drive units ... 258
11.4.1 Combustion engine (diesel) ... 260
11.5 Radio control ... 282
11.6 RUD lifting accessories ... 306
11.7 Accessories documentation ... 310
11.7.1 TEUPEN Operator Protection ... 312

1 General

1.1 Information about these instructions

These instructions enable safe and efficient handling of the aerial lift platform (also referred to below as the “machine”). The instructions are an integral part of the machine and must be kept in its immediate vicinity and remain accessible to the personnel at all times.

The trained personnel is required to have carefully read and understood these instructions prior to beginning any work. In addition to these instructions, also observe the supplier documentation included in the appendix. Working safely always requires that the safety instructions, step-by-step instructions and notes contained in these instructions are followed at all times.

In addition, observe the local accident prevention regulations and general safety instructions applicable at the machine’s deployment site.

Illustrations in these instructions are intended to convey a general understanding and may differ from the actual equipment.

1.2 Explanation of symbols

Safety instructions

These instructions indicate safety instructions using symbols. The safety instructions begin with a signal word that indicates the extent of the respective risk.

DANGER

This combination of symbol and signal word indicates an immediate hazard that will result in death or serious injury if not averted.

WARNING

This combination of symbol and signal word indicates a potential hazard that may result in death or serious injury if not averted.

CAUTION

This combination of symbol and signal word indicates a potential hazard that may result in slight or minor injury if not averted.

CAUTION

This combination of symbol and signal word indicates a potential hazard that may result in damage to property or the environment if not averted.

Environmental protection

This combination of symbol and signal word indicates a potential environmental hazard.

Tips and recommendations

NOTICE

This combination of symbol and signal word indicates useful information and recommendations that assist in using the machine efficiently and in avoiding faults.

Specific notes on safety

The following symbols are used in the safety instructions in order to highlight specific hazards:

DANGER

This combination of symbol and signal word indicates hazards resulting from electrical current. Failure to observe the safety instructions may cause serious or fatal injury.

Pictograms in these instructions

These instructions use the following pictograms and highlighting to indicate step-by-step instructions, the results of actions, lists, references and other elements:

Pictogram	Explanation
1.	- Step-by-step instructions (numbered)
-	- Results of individual steps
↳	- References to chapters within these instructions or to other applicable documents
■	- Indicates lists without a specifically required order
[button]	Operating elements (e.g. buttons, switches), indicator elements (e.g. telltale lamps)

1.3 General symbol explanations

Safety instructions

	This warning symbol indicates electricity		This warning symbol indicates a risk of crushed limbs
	This warning symbol indicates hot surfaces		

Prohibition signs

	Do not use high-pressure jets		Keep out of working basket when machine is driving
	Working with the aerial lift prohibited for under-18s		Observe aerial lift's swivel range
	Do not work on live parts		Observe lateral force
	Keep loads level when lifting		Observe wind speed
	Do not climb onto working basket's railing		

Mandatory instruction signs

	Wear foot protection		Wear a welding mask
	Wear protective clothing		Earth before using
	Wear hand protection		Wear hearing protection
	Wear safety harness		Wash your hands
	Wear safety goggles		Apply skin protection
	Wear protective headgear		Disconnect from mains
	Wear breather mask		Observe operating instructions
	Wear facemask		Wear high-visibility jacket

1.4 Limitation of liability

All data and notes in these operating instructions have been compiled in compliance with the applicable standards and regulations and based on the technological state of the art as well as on our many years of knowledge and experience.

The manufacturer shall accept no liability for damage caused by:

- Failure to observe these instructions
- Improper use
- Deployment of untrained personnel
- Improper assembly, commissioning, operation or maintenance of the machine
- Operation of the machine with faulty safety equipment or improperly attached or inoperative safety devices and protective barriers
- Unauthorised conversion
- Technical modifications
- Insufficient monitoring of the machine parts subject to wear
- Improperly performed repairs
- Use of unapproved spare parts
- Unauthorised modification of a component's software
- Disasters caused by foreign bodies or acts of God

The actual scope of supply may differ from that described and shown in these instructions in the case of special designs, where additional options have been ordered or as a result of the latest technical changes. The obligations entered into as part of the supply contract, the general terms and conditions and the manufacturer's delivery conditions, and the legal provisions as applicable at the time of concluding the contract shall apply.

1.5 Copyright

The content of these instructions is subject to copyright.

Its use is permitted within the scope of machine operation. Any use beyond this (electronic or manual), in whole or in part, including translation into another language, requires the manufacturer's written consent.

All rights to these instructions held by Teupen Maschinenbau GmbH.

1.6 Warranty conditions

The warranty terms are included in the manufacturer's

general terms and conditions.

1.7 Notes regarding the warranty card

To ensure that any warranty claims can be smoothly processed among customer, service partner and Teupen, it is essential that the warranty card included at the beginning of the machine record be filled in and sent back to Teupen immediately

after the machine has been handed over the owner. If the warranty card is not filled in correctly, we will not be able to process any warranty claims as important data required for processing will not be available to us.

Please send the warranty card to:

Teupen Maschinenbau GmbH

Service Point

Marie-Curie-Straße 13

48599 Gronau, Germany

Example of correctly filled in warranty card:

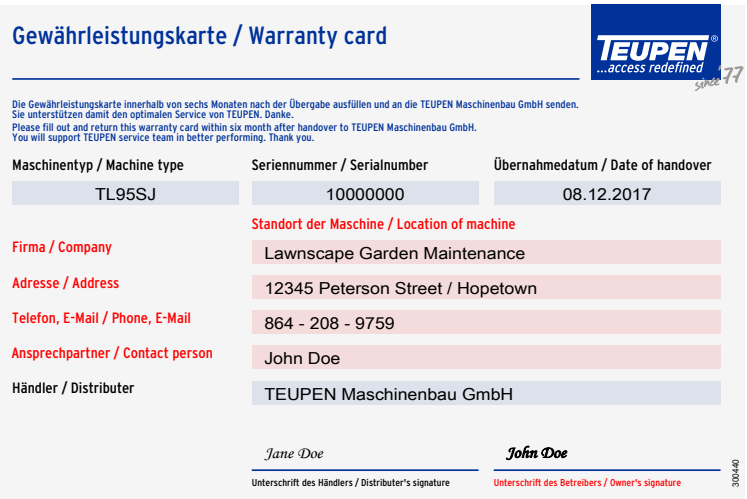

Gewährleistungskarte / Warranty card

TEUPEN ...access redefined since '77

Die Gewährleistungskarte innerhalb von sechs Monaten nach der Übergabe ausfüllen und an die TEUPEN Maschinenbau GmbH senden. Sie unterstützen damit den optimalen Service von TEUPEN. Danke.
Please fill out and return this warranty card within six month after handover to TEUPEN Maschinenbau GmbH. You will support TEUPEN service team in better performing. Thank you.

Maschinentyp / Machine type	Seriennummer / Serialnumber	Übernahmedatum / Date of handover
TL95SJ	10000000	08.12.2017

Standort der Maschine / Location of machine

Firma / Company	Lawnscape Garden Maintenance
Adresse / Address	12345 Peterson Street / Hopetown
Telefon, E-Mail / Phone, E-Mail	864 - 208 - 9759
Ansprechpartner / Contact person	John Doe
Händler / Distributer	TEUPEN Maschinenbau GmbH

Jane Doe — Unterschrift des Händlers / Distributer's signature

John Doe — Unterschrift des Betreibers / Owner's signature

300440

Fig. 1

1.8 Product trainings

Besides comprehensive training on the machine, we offer a broad range of training courses in the fields of operation, maintenance and application.

For further details, visit http://www.teupen.com.

2 EC Declaration of Conformity

EC Declaration of Conformity as per EC Machinery Directive 2006/42/EC of 2006-05-17, appendix II A

We hereby declare that the following machinery satisfies the essential health and safety requirements of the Machinery Directive, including the changes in force at the time of the declaration conform by its design, construction and model type produced by us. This declaration will be rendered null and void in case of any change made to the machine without consulting with us.

Manufacturer:	Teupen Maschinenbau GmbH Marie-Curie-Straße 13 48599 Gronau, Germany		
Machine designation:	Mobile aerial lift platform		
Machine type:	LEO27T	LEO31T	LEO35T
Test number:	340697600	340644700-2	340764500
Applicable EC directives:	EC Machinery Directive 2006/42/EC EC Low Voltage Directive 2014/35/EU EC Electromagnetic Compatibility Directive 2014/30/EU EC Directive 2000/14/EC		
Applicable harmonised standards:	EN 280:2013		
	EN ISO 12100-1/-2:2003	Safety of machinery - Basic terms, general principles for design	
	EN ISO 13850	Safety of machinery - Emergency Stop, general principles for design	
	EN 60204-1:2006	Safety of machinery - Electrical equipment of machinery - Part 1: General requirements	
Applicable national standards and technical specifications:	BGG 945		
Appointed agent for the compilation of the technical documents:	TEUPEN Maschinenbau GmbH Marie-Curie-Straße 13 48599 Gronau, Germany		
Appointed office for type approval procedures:	DEKRA Certification GmbH Handwerkstraße 15 D-70565 Stuttgart Reg. No. 0124		

Gronau, _____

ppa. T. Ritzenhöfer

Tobias Ritzenhöfer *(Technical Director)*

3 Safety

This section provides an overview of all key safety aspects for protecting people and for safe and fault-free operation. Additional specific safety instructions are included in the sections detailing the individual service life phases.

3.1 Basic hazards

The following section indicates remaining risks which may arise in connection with the machine even when it is used for its proper use.

In order to reduce the risks of personal injury and material damage and to prevent hazardous situations, adhere to the safety instructions listed here and the safety instructions in the other sections of these operating instructions.

3.1.1 General hazards in the work station

Swivelling aerial access platform

WARNING

Risk to life due to swivelling aerial access platform!

During operation, the aerial access platform can swivel out. This can cause severe injuries or even death.

- Never step under or into the swivel range of the aerial access platform.
- Only move the aerial access platform under supervision.
- Always operate the aerial access platform as a pair, with the help of a second person.
- Always wear personal protective equipment.

Work on higher up situated places

WARNING

Risk of falling!

During work on higher up situated places, there is a risk of falling. This can cause serious or even fatal injuries.

- Always wear full body harnesses (acc. to EN361) when in the working basket and do not swing or move abruptly.
- Do not climb onto the safety fence around the basket.
- Make sure that the machine is set up properly and holds securely.
- Make sure that when moving the working basket, no body parts are crushed, e.g. against a wall.
- At wind speeds above 12.5m/s (wind strength 6 Bft), stop work immediately.
- Always wear personal protective equipment.

Exhaust gases

WARNING

Risk to life from poisoning or suffocation due to exhaust gases!

When inhaled, exhaust gases can lead to suffocation and cause severe poisoning as well a illness of the respiratory system.

- Always ensure fresh air supply when working on the machine in diesel engine mode.
- Any person inhaling exhaust gases must be provided with fresh air immediately and checked by a physician.

3.1.2 Hazards due to electric energies

Electrical current

DANGER

Risk of fatal injury due to electrical current!

There is a direct risk of fatal injury due to electric shock in case of contact with live parts. Damage to the insulation or individual components may represent a risk of fatal injury.

- Do not work on or near high-voltage lines.
- Only have qualified electricians perform work on the electrical system.
- In case of damage to the insulation, switch off the voltage supply immediately and have the machine repaired.
- Never bypass or disable any fuses or circuit breakers. When changing fuses or circuit breakers, make sure that the ampere rating is correct.
- Keep moisture away from parts which are live with voltage. It may cause a short-circuit.
- Adhere to cable strengths based on "Cable length". Electric motor.
- Lay (extension) cables so that they cannot be driven over, they do not come into contact with liquids, they are not sharply nicked or otherwise stressed.
- Keep outlet easily accessible at all times.
- Before performing work on live parts, pull the mains plug.

Batteries

WARNING

Risk of injury due to improper handling of batteries!

Wrong handling of batteries poses the risk that the batteries burst or that noxious liquid leaks from the batteries. The liquid may cause skin burns when in contact or severe poisoning if swallowed and can cause blindness when contact with the eyes.

- Never short-circuit the contacts (plus and minus pole) of the battery.
- Never use or store batteries at locations with potentially explosive atmosphere or where high temperatures occur.
- Never try to weld, repair or change batteries in any manner or take it apart or retrofit.
- Always protect battery from unauthorized access.
- To prevent fire, overheating, explosion or leakage of fluid never expose the batteries to severe vibration, high weight bearing or other harmful effects. Leaking and spilled liquid can ignite.
- Avoid contact with spilled liquid.

Measures after contact with battery fluid:

- Wash skin with water and soap after contact.
- Immediately flush out eyes and underneath eye lid for 15 minutes with clear water. When doing so, point mild water jet directly into the eye, do not rub eyes, immediately contact a physician.

3.1.3 Hazards due to mechanical elements

Falling parts

WARNING

Risk of injury due to falling parts!

During operation, material can fall down uncontrolled and cause severe injuries.

- Make others aware of the danger zone and block off the area.
- Do not enter the danger zone during normal operation.
- Never place objects on the working basket safety fence.

Outriggers and arms

DANGER

Risk of crushing on outriggers and arms!

When bracing or swivelling the machine, there is a risk of crushing.

- Make sure that when bracing, no persons, supply lines or other objects are in the area around the supports.
- Ensure that no persons are within the danger zone when swivelling the machine.
- Make sure that no persons are in the danger zone when moving into transport position.

Insufficient stability

WARNING

Risk of injury due to insufficient stability!

Without sufficient stability, there is a risk of the machine toppling. This can cause serious or even fatal injuries.

- Make sure that the ground has sufficient load capacity.
- Do not exceed the maximum slope.

Chain drive

WARNING

Risk to life due to pulling in and pinching off body parts on the chain drive!

Running chains and rotating chain wheels can pull in pieces of clothing as well as body parts and thus cause severe to fatal injuries.

- During operation, do not reach into running chains or chain wheels.
- Keep chain drives inaccessible during operation. Do not open any covers.
- While in the danger zone, wear closely-fitting protective clothing with low tear strength.
- Before all work on chains or chain wheels, switch the machine off and secure against restart. Wait until all components have come to a standstill.
- During operation, maintain a sufficient safety distance.
- Pay attention to the change of direction.

WARNING

Risk of injury due to driving over body parts!

With the crawler chassis, there is a risk of pinching off body parts and thus causing severe to fatal injuries.

- During operation, do not reach into running chains or chain wheels.
- During operation, maintain a sufficient safety distance.
- Pay attention to the change of direction.
- Do not drive over power lines.

3.1.4 Hazards due to hydraulic energies

Hydraulics

WARNING

Risk of fatal injury posed by hydraulic energies!

Hydraulic powered moving parts can cause serious injuries.

- Work on hydraulic system may only be carried out by hydraulic experts.
- Before starting any work de depressurise the hydraulic system.
- Never reach into moving parts or work on moving parts during operation.
- Do not open covers during operation.
- While in the danger zone, wear closely-fitting protective clothing with low tear strength.

3.1.5 Hazards due to high temperatures

Hot surfaces

WARNING

Risk of injury due to hot surface!

Surfaces of motor components can heat up considerably during operation. Skin contact with hot surfaces causes severe burns to the skin.

– Avoid contact with hot motor components such as exhaust system, radiator, hoses and engine block.
– Check before all work on engine components, as to whether these are hot. Allow them to cool down if necessary.

3.1.6 Hazards due to chemicals

Anti-freeze agents

WARNING

Health hazard due to anti-freeze agents!

The coolant of the diesel engine consists of a water anti-freeze agent mixture. Upon body contact, ingestion or inhalation of areosoles, anti-freeze agents can lead to serious health problems.

– Avoid contact with anti-freeze agents.
– Do not eat, drink or smoke when handling anti-freeze agents. Prior to breaks and completion of work, wash hands.
– Wear protective gloves when working with anti-freeze agents.

Measures after contact with anti-freeze agents:

- Wash skin with lots of water after contact.
- Rinse eyes thoroughly with water for at least 15 minutes after contact and consult a physician.
- Rinse out mouth after ingesting and drink lots of water thereafter. Consult a physician.
- After aerosol inhalation go outdoors for fresh air.

Motor oil

WARNING

Risk of injury due to motor oil!

Motor oil contains toxic substances that can trigger inflammation and are carcinogenic.

– Prevent skin contact with motor oil.
– After accidental skin contact, immediately wash your hands with soap. Do not use gasoline, solvent or other chemical cleaners.

Hydraulic oil

DANGER

Risk of injury from hydraulic oil

Skin contact with hydraulic oil can cause skin disease and serious injury.

- Prevent all contact between skin and hydraulic oil.
- In the event of inadvertent skin contact, immediately wash the affected areas with soap. Never use petroleum ether, solvents or other chemical detergents.
- In the event of contact with a high-pressure hydraulic oil jet, seek medical attention immediately.

DANGER

Risk of injury from hydraulic oil jet

Subcutaneous injection of hydraulic oil can cause serious or even fatal injury.

- Get affected persons to a hospital immediately or, in the case of eye injuries, to an ophthalmic clinic.
- Even if there is only the slightest suspicion or minor externally visible injury, affected persons must seek medical attention immediately.

3.1.7 Hazards due to traffic and vehicles

Public street traffic

WARNING

Risk to life due to parts protruding into the traffic area!

Failure to heed flowing traffic can cause accidents with the most severe injuries or even death.

- Secure the danger zone around the aerial access platform completely and visibly (even in case of poor visual conditions).
- Always be prepared for possible traffic accidents, especially such kind as can be caused by third parties.

Industrial trucks

WARNING

Risk to life due to industrial trucks!

There is a risk that people can be overlooked and run over by the vehicle driver.

- Only have industrial trucks operated by trained personnel.
- Only walk past industrial trucks if the vehicle driver has indicated that he has seen the people.

3.2 Proper use

The machine is designed solely for the proper use described here.

The machine is designed to transport people and tools up to the maximum permissible working basket load to facilitate execution of work at locations of height.

The machine can also be employed as a crane when using a lifting device approved by the manufacturer.

Intended use also includes adhering to all the information and specifications in these instructions.

Any use going beyond the intended use or other type of use is regarded as improper use.

DANGER

Danger through improper use

Improper use of the aerial lift platform can cause hazardous situations.

- Never use the aerial lift platform to brace loads.
- Use the aerial lift platform as a crane only if a lifting device approved by the manufacturer has been mounted.
- Never use the aerial lift platform for lateral pulling.
- Never use the aerial lift platform for work on or in the vicinity of open, live parts of electrical systems.
- Never operate the aerial lift platform in a potentially explosive atmosphere.
- Never attach excess loads in or on the working basket. (For example do not lay branches or large chunks of wood into or across the working basket when performing tree-felling operations.)
- Never set up ladders in the working basket to reach higher positions.

No claims of any kind can be asserted for damage resulting from misuse.

3.3 Responsibility of the owner

Owner

The owner is the person who uses the machine for commercial or economic purposes himself or authorises use/operation by a third party and bears the legal product responsibility for the protection of the user, operating personnel or thirst party during operation.

Duties of the owner

The machine is used in the commercial realm. Therefore, the owner of the machine is subject to the legal obligations relating to occupational safety.

In addition to the safety instructions in these instructions, the valid safety, accident prevention and environmental protection regulations applicable to the machine's area of application must be adhered to.

Here, the following points apply in particular:

- The owner must inform himself about the applicable occupational safety provisions and also determine, in a risk assessment, the risks which arise due to the specific working conditions in the place where the machine is used. He must implement these in the form of operating instructions for the operation of the machine.
- The owner must check during the entire time the machine is used whether the operating instructions he has created correspond to the current state of regulations; if necessary, he must adapt the operating instructions.
- The owner must clearly regulate and specify the responsibilities for installation, operation, fault repair, maintenance and cleaning.
- The owner must ensure that all employees who handle the machine have read and understood these instructions. In addition, the personnel must be trained by the owner and informed about the risks.
- The owner must provide the required protective equipment and ensure that the personnel wears the required protective equipment.

Furthermore, the owner is responsible for ensuring that the machine is always in technically-perfect condition. Therefore, the following points apply:

- The owner must ensure that the maintenance intervals described in these instructions are adhered to.
- The owner must check all safety devices for perfect function before each commissioning or have it checked by an authorised person.

3.4 Personnel requirements

3.4.1 Qualification

Qualification

WARNING

Risk of injury in case of insufficient qualification of the personnel!

If unqualified personnel undertakes work on the machine or is in the machine's danger zone, dangers arise which can cause severe injuries and significant property damage.

- Have all work performed by qualified personnel.
- Keep unqualified personnel away from the danger zones.

These instructions specify the following personnel qualifications for the various tasks:

Trained persons

Trained persons have received documented training without prior knowledge in proper use by the owner, including instruction regarding function and potential hazards that the aerial lift platform may cause.

Qualified electrician

A qualified electrician has the specialist training, skills and experience and knowledge of the applicable standards and regulations required to perform work on electrical systems and to autonomously identify and avert potential dangers.

Qualified electricians have been trained specifically for working in their particular field and know the relevant standards and regulations.

A qualified electrician is required to comply with the applicable legal provisions on accident prevention.

Qualified personnel

Qualified personnel are members of staff who are able to carry out the tasks assigned to them and detect and prevent possible hazards independently as a result of their specialist training, knowledge and experience and their knowledge of the valid regulations.

Hydraulics specialist

The hydraulics specialist has been trained and is qualified to work in the specific field and is familiar with the relevant standards and regulations.

The hydraulics specialist is capable of carrying out work on hydraulic systems and identifying and preventing possible hazards independently due to specialist qualification and experience.

Qualified drive unit specialist

A qualified drive unit specialist has the specialist training, skills and experience and knowledge of the applicable standards and regulations required to perform work on electrical systems and to autonomously identify and avert potential dangers. Our customer service is available for execution of required work on the drive unit. See page 2 for contact details.

Competent person

A competent person is a person who has sufficient knowledge of the field of lifting platforms due to his or her specialist training and experience, and is familiar enough with the valid state regulations, regulations for the prevention of accidents and generally recognised rules of technology (e.g. trade association rules, DIN standards, VDE regulations, technical rules of other member states of the European Union or other contractual states of the agreement on the European Economic Area) to be able to assess whether lifting platforms are in safe and operable condition.

Only such persons may be deployed as personnel who are 18 years of age and who can be deemed reliable. Persons whose reaction is impaired, e.g. through drugs, alcohol or medication, are prohibited.

3.4.2 Unauthorised Persons

WARNING

The hazards in the danger zone and working area pose a risk of fatal injury to unauthorised persons!

Unauthorised persons who do not satisfy the requirements described here are not aware of the hazards in the working area. Unauthorised persons are therefore at risk of serious or fatal injury.

- Keep unauthorised persons away from the danger zone and working area.
- If in doubt, approach unauthorised persons and ask them to leave the danger zone and working area.
- Stop work as long as unauthorised persons are within the danger zone and working area.

3.4.3 Training

The owner is instructed by the manufacturer. Staff must be provided with training accordingly by the owner.

3.5 Personal protective equipment

Personal protective equipment protects staff from hazards which may compromise their safety or health whilst working.

Staff must wear personal protective equipment when performing any work on and with the machine. Specific reference will be made to this requirement wherever necessary in the individual sections in these instructions. A description of this personal protective equipment is provided in the following:

- It is imperative that the personal safety clothing and equipment required in the various chapters of these instructions is put on before starting the work.
- Adhere to the signs in the working area regarding personal protective equipment.

Description of the personal safety clothing and equipment

Occupational safety clothing

Fig. 2

Occupational safety clothing is close-fitting work clothing with a low tear strength, with close-fitting sleeves and no protruding parts. It primarily is used to prevent being caught up in moving parts of the machine. Do not wear rings, chains or other items of jewellery.

Safety harness

Fig. 3

The safety harness is used to provide protection from falling in situations in which there is an increased risk of falls. There is an increased risk of falls when certain heights are exceeded and the work location is not safeguarded by a railing.

Wear the safety harness so that the safety rope is connected to the safety harness and a fixed fastening point.

Safety harnesses must only be used by specially trained personnel.

Safety goggles

Fig. 4

Safety goggles are used to protect the eyes from flying parts and splashed liquids.

Safety helmet

Fig. 5

The safety helmet provides protection from falling or flying parts and materials.

Safety boots

Fig. 6

Safety boots are used to provide protection from heavy, falling objects and slipping on slippery surfaces.

3.6 Safety equipment

WARNING

Risk of fatal injury due to defective safety devices!

Safety devices that are defective or have been made inoperative can cause serious or fatal injuries.

- Prior to starting work, check the safety devices for damage.
- Never make safety devices inoperative or bypass safety devices.
- Make sure that all safety devices are accessible at all times.

3.6.1 Position of the safety equipment

Right-side view

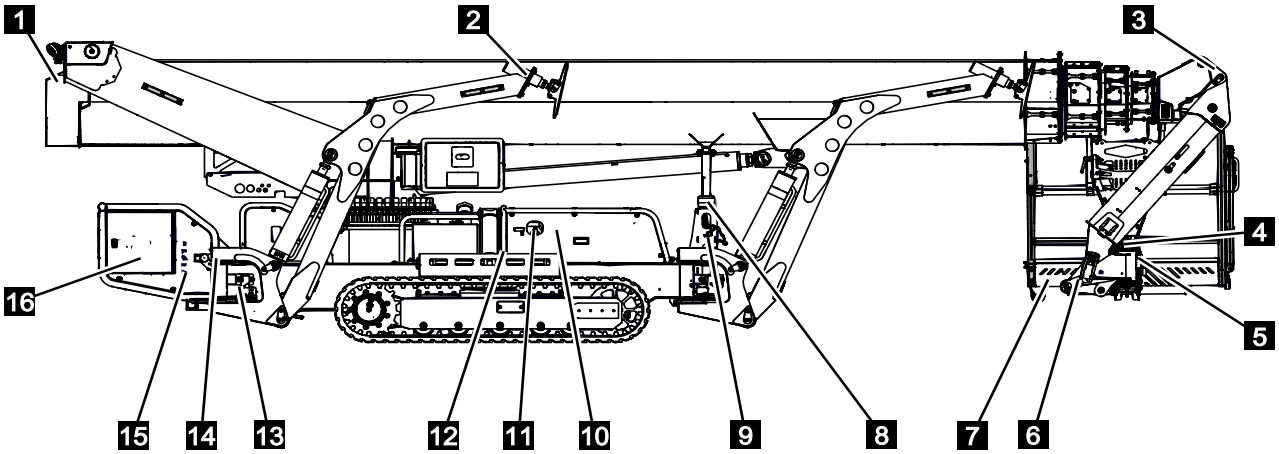

Fig. 7

1	Length measurement sensors (2x)	9	Mount position proximity switch
2	Limit switch, floor pressure (1x per outrigger)	10	Electric back-up pump
3	Rotary angle sensor, basket boom	11	Battery cut-off switch (not for LI-ION drive)
4	Rotary angle sensor, working basket	12	Tilt sensor
5	Proximity switch (working basket centre position)	13	Outrigger locking mechanism limit switch (1x per outrigger)
6	Rotary angle sensor, working basket height	14	Outrigger position limit switch (1x per outrigger)
7	Dead-man's button (USA only)	15	Valves, chassis emergency operation
8	Limit switch for profile in transport position	16	FI circuit breaker

Left-side view

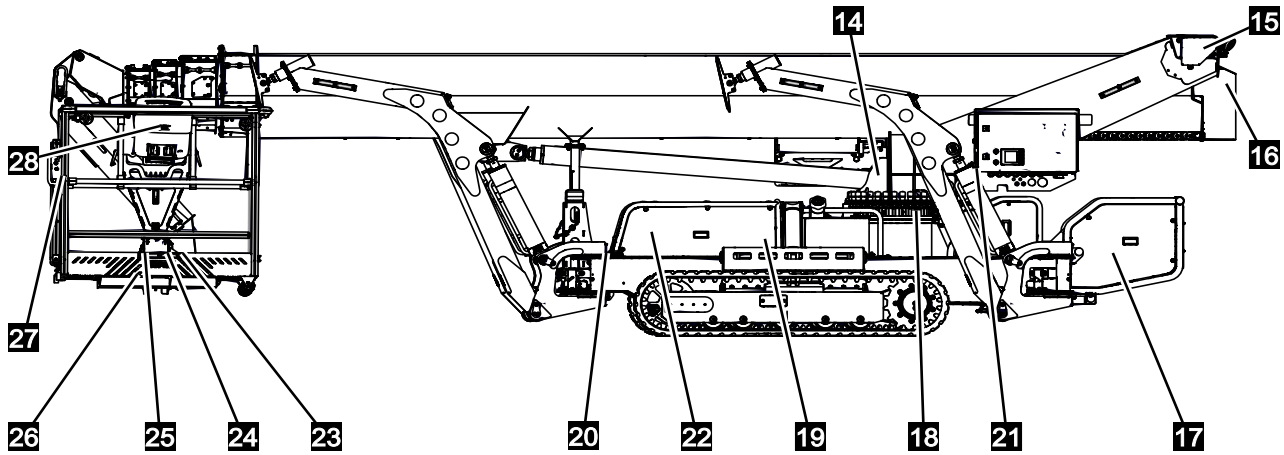

Fig. 8

14	Pressure sensors for telescopic boom cylinder	22	Battery cut-off switch (for LI-ION drive only)
15	Rotary angle sensor, telescopic boom 2x	23	Lifting device proximity switch (optional)
16	Limit switch, rope break (extension ropes)	24	Electronic disconnector (ladder monitoring, working basket operation, lifting device and work spotlights)
17	Valves for platform and chassis emergency operation	25	Basket locking pin monitoring proximity switch
18	Rotary angle sensor, pivot monitor (2x)	26	Basket scale
19	Main battery	27	Ladder monitor proximity switch
20	Circular level	28	Emergency stop button on control panel
21	Emergency stop button on control box		

3.6.2 Description of safety equipment

Emergency stop button

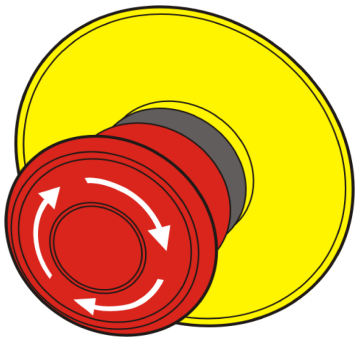

Fig. 9

Pressing the emergency stop button shuts down the machine by immediately switching off the energy supply. Once the emergency stop button has been pressed, it has to be released by turning or pulling it before the machine can be switched back on again. The Emergency Stop Button of the remote control must be unlocked by pulling it.

WARNING

Risk of fatal injury due to uncontrolled restart!

Uncontrolled restart can cause serious or even fatal injuries.

- Before restart, make sure that the cause for the emergency stop has been cleared and that all safety devices have been installed and are fully functional.
- Do not release the Emergency Stop Button until there is no longer any risk.

Limit switches

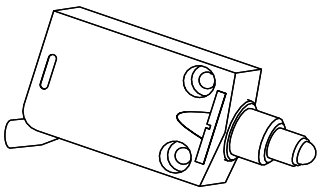

Fig. 10

Limit switches retrieve the correct positioning of certain components. For example, the limit switches can prevent the inadvertent movement of the machine.

Proximity switches

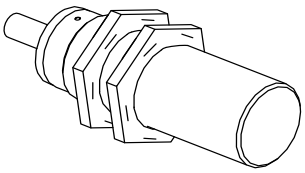

Fig. 11

Proximity switches survey the correct positioning of certain components. They can thus detect a particular position of the working basket, for example.

Safety

Rotary angle sensors

The rotary angle sensors monitor the angle of the lift boom holder, lower boom, upper boom and working basket. Depending on the conditions, fault messages may be issued, the lowering speed may be regulated and the correct position for lowering into the transport position may be displayed as a result.

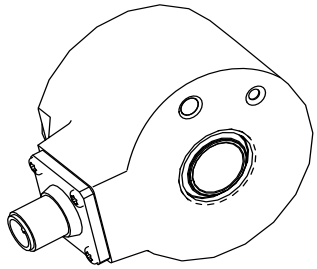

Fig. 12

Length measurement sensors

Length measurement sensors detect the profiles' extension travel.

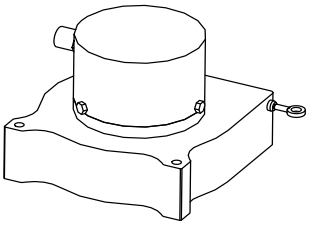

Fig. 13

Tilt sensor

During automatic bracing, the tilt sensor is used to automatically level the aerial lift platform horizontally.

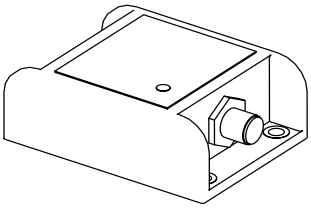

Fig. 14

Circular level

The maximum permissible inclination is noted on the type plate; this must be checked visually with the circular level.

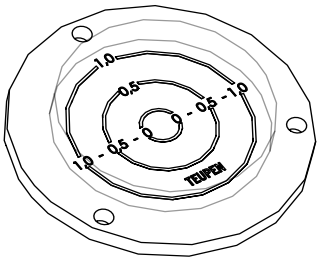

Fig. 15

Battery cut-off switch/battery cut-off connector

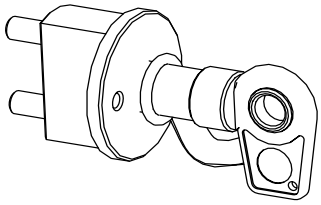

Fig. 16

The battery cut-off switch is always near the battery. It is used to disconnect the battery from the electrical system. This is useful before putting the machine into storage for a longer period, for example.

Valves for emergency and service mode

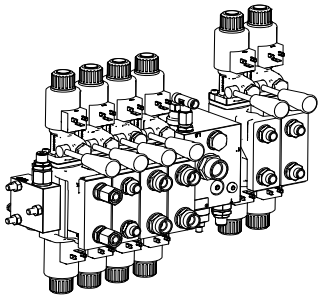

Fig. 17

In the event of power failure or for maintenance purposes, the aerial lift platform can be operated in emergency mode. A number of valves allow the various movements to be executed using a hand pump or electric back-up pump.

Battery monitor

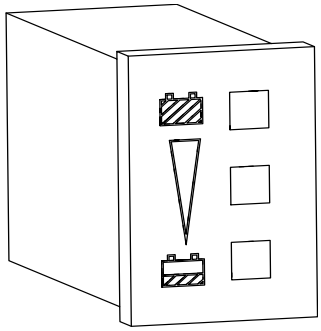

Fig. 18

The battery monitor displays the current battery capacity.

FI circuit breaker

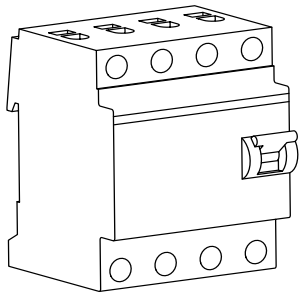

Fig. 19

The FI circuit breaker is designed to interrupt all power supply phases in the event of insulation failure through a dangerous contact voltage.

Basket scale

The basket scale measures the weight present in the working basket.

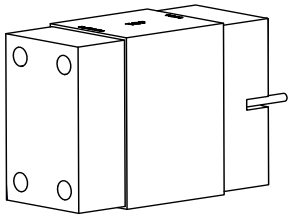

Fig. 20

3.7 Symbols on the machine

WARNING

Risk of injury due to illegible symbols!

Over time, stickers and signs may become soiled or become illegible in other ways. As a result hazards may not be recognised and it may not be possible to follow the necessary operating instructions. This will result in a risk of injury.

- Always keep all safety, warning and operating instructions in fully legible condition.
- Replace damaged signs or stickers immediately.

NOTICE

Replacement stickers can be ordered from the manufacturer. Please specify the item number with your order.

See page 2 for contact details.

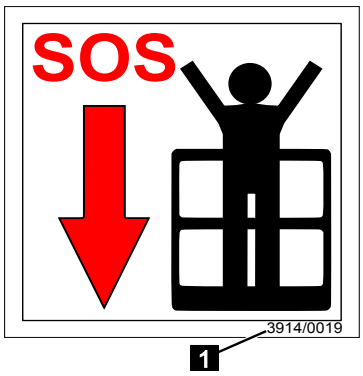

Fig. 21

Each sticker has an item number. This article number may be found in various positions on the sticker. In the example (item 1) 3914/0019 (Fig.21/1]

A list of the stickers and symbols used and their respective positions is included in the appendix (↳Chapter 11 „Appendix", on page 231).

3.8 How to act in case of fire or accidents

Preventative measures

- Always be prepared for fire and accidents.
- Always keep first-aid equipment (first-aid kit, blankets, etc.) and fire extinguisher fully functional and readily available.
- Familiarise staff with the procedures for reporting accidents and first aid and rescue equipment.
- Keep access routes for rescue vehicles open.

Measures in the case of fire or accidents

- Immediately initiate emergency stop with Emergency Stop device.
- If there is no danger to your own health, rescue people from the danger zone.
- If necessary, initiate first aid measures.
- Inform the fire brigade and/or rescue service.
- During a fire outbreak: If there is no risk to yourself, attempt to put out the fire with fire extinguishers and continue fighting the fire until the fire service arrives.
- Inform responsible people on-site.
- Open access routes for rescue vehicles.
- Instruct rescue vehicles routing.

3.9 Environmental protection

Environmental protection

Danger to the environment due to incorrect handling of materials which can harm the environment!

In case of incorrect handling of materials which can harm the environment, especially improper disposal, there can be significant damage to the environment.

– Always heed the notes below about the handling of materials which can harm the environment and their disposal.
– If materials which can harm the environment accidentally escape into the environment, take suitable measures immediately. In case of doubt, inform the responsible local authority about the damage and ask what suitable measures to take might be.

The following harmful substances are used:

Liquid cleaning agents

Liquid cleaning agents containing solvents include toxic substances. They must be prevented from entering the environment. They must be disposed of by a specialist disposal company.

Lubricants

Lubricants such as greases and oils contain toxic substances. They must be prevented from entering the environment. They must be disposed of by a specialist disposal company.

Safety

Hydraulic oil/motor oil	Hydraulic oil can cause long-term damage to bodies of water. It must be prevented from entering the environment. It requires disposal by a specialist disposal company.
Fuels	Fuels contain toxic substances. They must be prevented from entering the environment. They must be disposed of by a specialist disposal company.
Rechargeable and disposable batteries	Rechargeable and disposable batteries contain toxic heavy metals. They require treatment as toxic waste and must be submitted to municipal collection points or collected for disposal by specialists.
Cooling water with antifreeze	Cooling water and antifreeze contain toxic substances. They must be prevented from entering the environment. They must be disposed of by a specialist disposal company.

4 Technical data

4.1 Dimensions

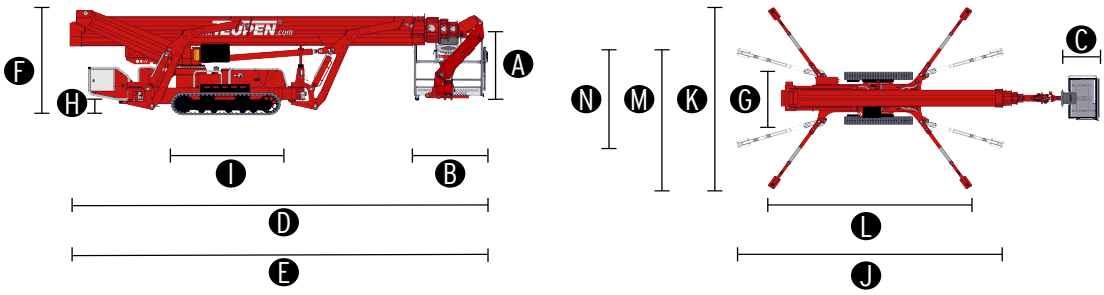

Item	LEO27T	LEO31T	LEO35T
Working basket (height) **(A)**	1,15 m	1,15 m	1,15 m
Working basket (length) **(B)**	1,2 m	1,2 m	1,2 m
Working basket (width) **(C)**	0,8 m	0,8 m	0,8 m
Overall length (min.) **(D)**	7,3 m	7,3 m	7,3 m
Overall length without working basket **(E)**	7,3 m	7,3 m	7,3 m
Overall height (min.) **(F)**	1,96 m	1,96 m	1,96 m
Overall width (min.) **(G)**	1,58 m	1,58 m	1,58 m
Ground clearance (max.) **(H)**	0,43 m	0,43 m	0,43 m
Track (length x width) **(I)**	1,92x0,25 m	1,92x0,25 m	1,92x0,25 m
Wide bracing area (length) **(J)**	5,52 m	5,52 m	5,52 m
Wide bracing area (width) **(K)**	5,56 m	5,56 m	5,56 m
Narrow one-sided bracing area (length) **(L)**	7,51 m	7,51 m	7,51 m
Narrow one-sided bracing area (width) **(M)**	4,27 m	4,27 m	3,95 m
Narrow bracing area (width) **(N)**	2,98 m	2,98 m	2,98 m
Bracing pads **(Ø)**	0,31 m 0,22 m	0,31 m 0,22 m	0,31 m 0,22 m

4.2 Work diagrams

4.2.1 Aerial lift platform work diagram

The work diagram shows the aerial lift platform's work area. The work diagram is located in the working basket.

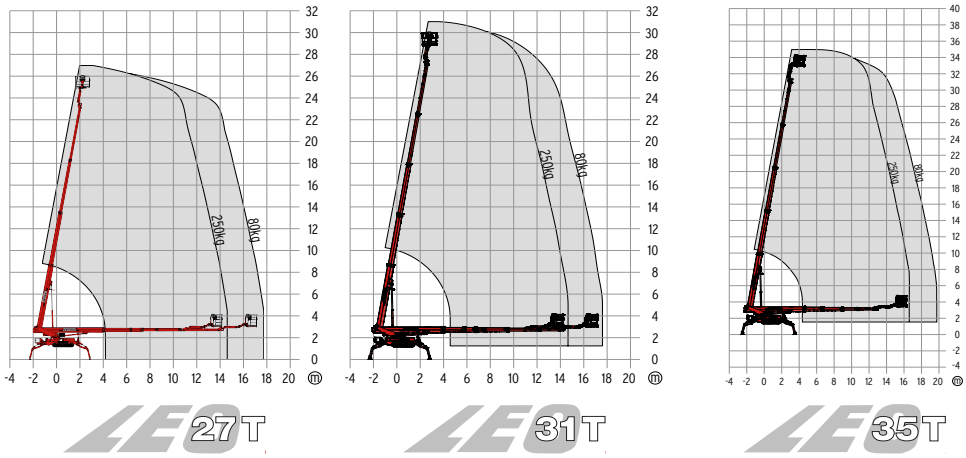

Fig. 22

4.3 Power

Item	LEO27T	LEO31T	LEO35T
Platform height (max.)	25 m	29 m	33 m
Working height (max.)	27 m	31 m	35 m
Lateral reach at 80 kg basket load	17,40 m*	17,7 m*	17,7 m*
Lateral reach at 250 kg basket load	14,40 m*	14,8 m*	14,8 m*
Working basket load (max.)	250 kg	250 kg	250 kg
Movable basket boom	180°	180°	180°
Platform's working range (max.)	450°	450°	450°
Can be braced up to gradient of the terrain	16,7° /30%	16,7° /30%	16,7° / 30,0 %
Chassis, height- and width-adjustable	22 / 19 cm	22 / 19 cm	22 / 19 cm
Climbing ability when driving forwards	16,7° /30%	16,7° /30%	16,7° / 30,0 %
Slope angle	21,0° / 38,0 %	21,0° / 38,0 %	21,0° / 38,0 %
Travel speed	1,1 m/s	1,1 m/s	1,1 m/s

4.4 Weights and loads

Item	LEO27T	LEO31T	LEO35T
Net weight	4050 kg*	4300 kg*	6100 kg*
Payload while driving	3,61 kN/m²	3,88 kN/m²	5,10 kN/m²
Payload in work position (wide)	1,37 kN/m²	1,6 kN/m²	2,20 kN/m²
Point load under bracing pad (max.)	27,3 kN	27,3 kN	44,00 kN

* The machine's precise weight is specified on the type plate.

4.5 Drives

4.5.1 Combustion engine

Diesel: Kubota D 1305

Item	Value	Unit
Power	18.5 (25.2)	kW (hp)
Tank capacity	49	L

4.5.2 Electric motor

Specification	Variant 110-120 V	Variant 220 V	Variant 230 V	Variant 400 V
Voltage	110-120 V	220 V	230 V	400 V
Current	19.3 A	13 A	12.9 A	10.0 A
Output	1.6 kW	2.2 kW		
Frequency	60 Hz	60 Hz	50 Hz	50 / 60 Hz

4.6 Emission

Indication	Value	Unit
Noise when driven by electric motor	< 70	dB(A)
Noise when driven by battery	< 70	dB(A)
Noise with diesel engine	< 89	dB(A)
Noise with petrol engine	< 89	dB(A)

4.7 Operating conditions

Item	Value	Unit
Maximum permissible wind speed during operation	12.5 (6)	m/s (Bft)
Temperature range	-15 to +40	°C

4.8 Consumables

Consumables 1

Symbol	Consumable	TEUPEN item number
▲	Multi-purpose grease	600799
▲	High-performance lubricant	3917/0103
▲	Spray grease	600777
▲	Spray grease	600784
▲	Cleaning agent	3910/0168

	Crawler chassis	Chassis	Lift boom holder	Profiles	Basket boom
Tensioning crawler tracks	▲				
Slider surfaces	▲			▲ ▲	
Rotating assembly			▲		
Articulated joints	▲	▲	▲	▲	▲
Extender/retractor chains				▲	
Extender/retractor ropes				▲	

Consumables 2

Symbol	Consumable	Type	TEUPEN item number
●	Hydraulic oil	Plantohyd 32-S	3917/0066
●	Gear oil	Gear oil	3917/0122
●	Motor oil	15W- 40	
●	Antifreeze agent	-	300413
●	Demineralised water	-	600778

	Crawler chassis	Diesel engine	Petrol engine	Battery drive	Hydraulic tank
Motor oil		●	●		
Coolant		● ●			
Battery acid				●	
Gearbox	●				
Hydraulic tank					●

Technical data

Oil recommendations

The aerial lift platform's hydraulic system is filled with the hydraulic oil noted above at the factory. It is recommended that you continue to use this hydraulic oil or that you replace it with one of the following hydraulic oils:

Operation temperature	BP	Esso	Fuchs	Shell
-15 to +40 °C	BP ENERGOL HLP D 22	HLPD_OEL 22	Renolin MR 5	Shell Hydrol DO 22

4.9 Filling quantities

	LEO19T, ZEUS19T, LEO23T, ZEU23T	LEO27T, ZEUS27T, LEO31T, ZEUS31T, LEO35T, ZEUS35T	LEO15GTplus, ZEUS15GTplus , LEO18GTplus, ZEUS18GTplus , LEO18GT,	LEO21GT, ZEUS21GT, LEO24GT, ZEUS24GT	LEO23GT, ZEUS23GT
Hydraulic oil system	approx. 60	approx. 87	approx. 45	approx. 55	approx. 85
Hydraulic oil tank	approx. 50	approx. 77	approx. 35	approx. 45	approx. 75
Fuel tank	25	49	12	12	12
Gear oil	max. 1	max. 1	max. 1	max. 1	max. 1
Vanguard 16HP	1.4	-	1.4	1.4	1.4
Kubota Z602 Motor oil	2.5	-	2.5	2.5	2.5
Kubota Z602 Coolant	2.8	-	2.8	2.8	2.8
Kubota D1305 Motor oil	-	2.8	-	-	-
Kubota D1305 Coolant	-	3.1	-	-	-

The filling quantities are specified in litres.

4.10 Type plate

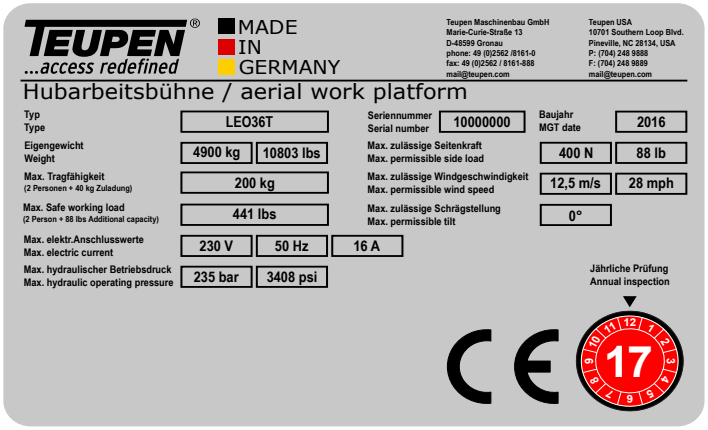

Fig. 23

The type plate is located on the chassis on the right-hand side of the vehicle and includes the following data:

- Manufacturer
- Type
- Serial number
- Year of manufacture
- Model year
- Net weight
- Load capacity
- Payload
- Maximum electrical connected loads
- Maximum hydraulic operating pressure
- Maximum permissible lateral force
- Maximum permissible wind speed

5 Construction and function

5.1 Overview

Overview right

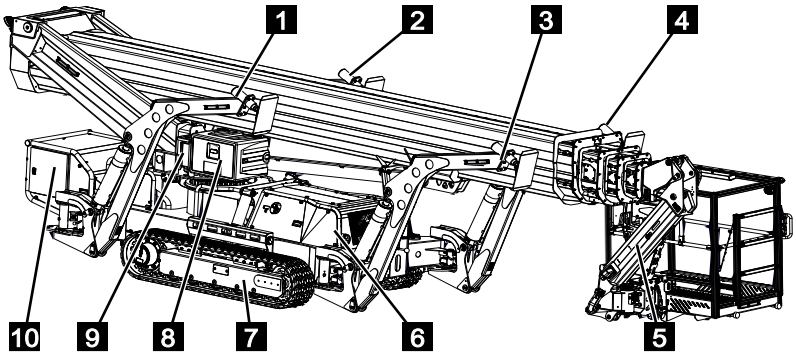

Fig. 24

1	Outrigger 2	6	Drive unit
2	Outrigger 3	7	Right crawler chassis
3	Outrigger 1	8	Stowage space
4	Outrigger 4	9	Radio control receiver
5	Basket boom (depends on machine type)	10	Chassis control box

Overview, left

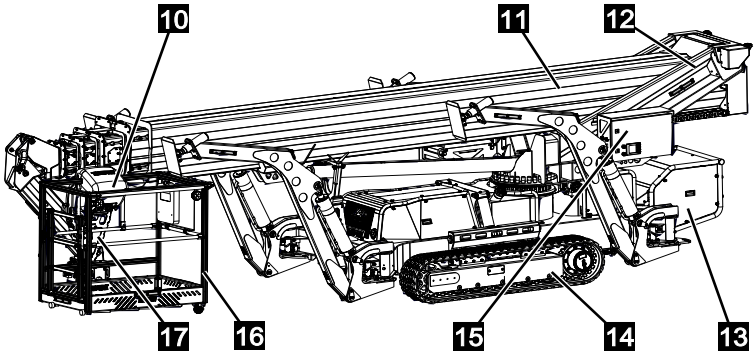

Fig. 25

10	Control head	14	Left crawler chassis
11	Telescopic boom	15	Lift boom holder control box
12	Lift boom holder	16	Working basket
13	Hydraulic unit	17	Charger control receiver

5.1.1 Brief description

The aerial lift is used for performing work at heights. It is controlled using a radio control in the working basket or on the ground.

If the radio control is not in the holder in the working basket, the functions "Raise" and "Telescope out" are disabled. In order to engage the aerial lift platform's work position, the automatic or manual bracing lifts the chassis using the outriggers. Lift operation may not be started until the chassis has been correctly levelled (visual inspection using circular level).

The bracings can be set in four bracing positions:

- Wide on both sides
- Narrow on one side, left
- Narrow on one side, right
- Narrow on both sides

You can adjust the height of the left-hand and right-hand chassis independently of one another mechanically or (optionally) hydraulically.

The working basket is kept horizontal at all times by an electro-hydraulic balancing system.

Power is supplied either from the mains supply (construction site feed point) using an extension cable, by a combustion engine or by a battery drive.

5.2 Assembly description

5.2.1 Crawler chassis

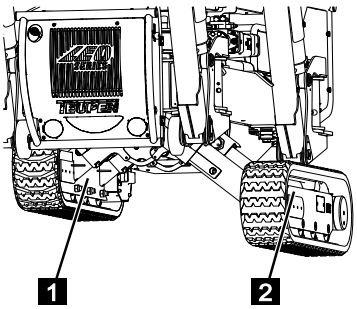

Fig. 26

In the transport position, the aerial lift can be moved using the crawler chassis. Only a grease gun is required for chain tensioning. When adjusting the chassis mechanically, the height and width of each crawler chassis can be individually set to one of three levels. If using the optional hydraulic chassis adjustment function, the height and width adjustments can be made infinitely variably. Chassis (Fig.26/1) is fully retracted and chassis (Fig.26/2) is fully extended.

5.2.2 Outriggers

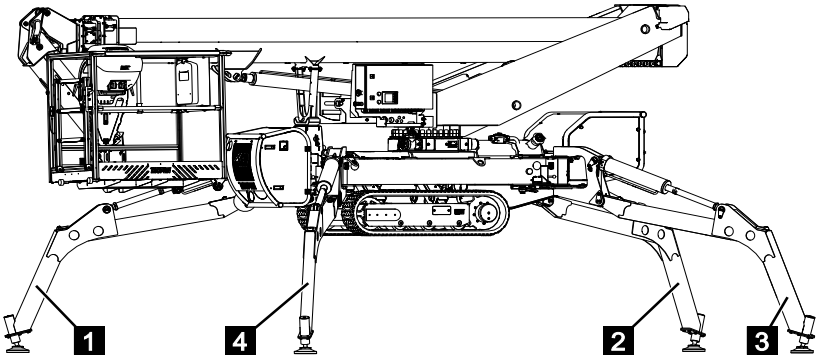

Fig. 27

The outriggers ((Fig.27/1 to 4) lift the chassis and the aerial lift platform thus engages the work position. The outriggers are numbered consecutively according to the position numbers. They can each independently of the others be moved to one of four different work positions: wide, narrow, narrow-wide and wide-narrow.

5.2.3 Platform

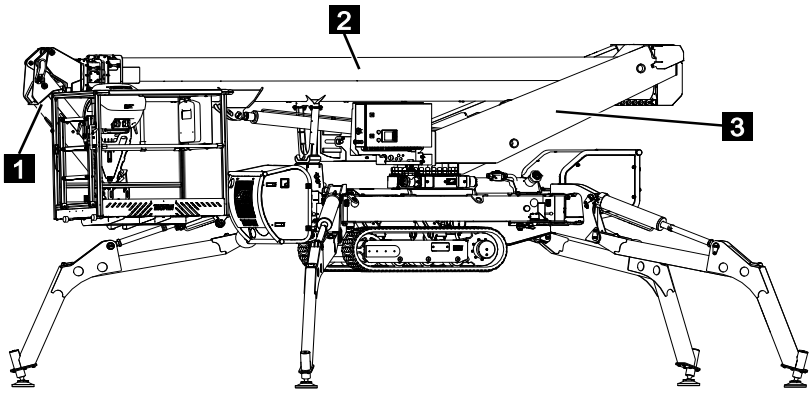

Fig. 28

The working platform essentially comprises the lift boom holder ((Fig.28/3), the telescoping profile assembly ((Fig.28/1) and, depending on the machine type, either a rigid or a movable basket boom ((Fig.28/2).

5.2.4 Working basket

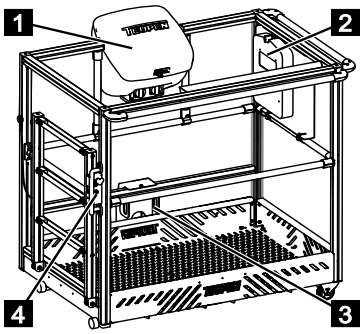

Fig. 29

The working basket has space for a maximum of two people. The radio control can be plugged into the control head (Fig.29/1). The operating instructions with hydraulics diagram and circuit diagram are located in the document box (Fig.29/2). The belt points (Fig.29/3) are intended for fastening the safety harness. The basket ladder monitor (Fig.29/4) monitors the basket ladder's position.

5.2.5 Movable basket boom

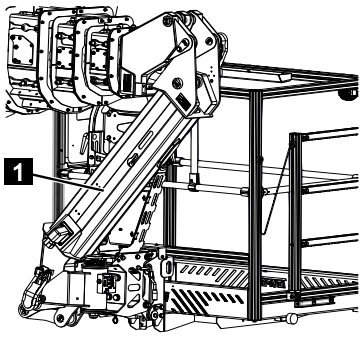

Fig. 30

Depending on the machine type, a movable basket boom is fitted. The movable basket boom (Fig.30/1) can be moved even when the machine is not braced. This can be useful for manoeuvring, for instance. The basket boom must be in transport position if an operator is present in the working basket.

5.2.6 Combustion engine

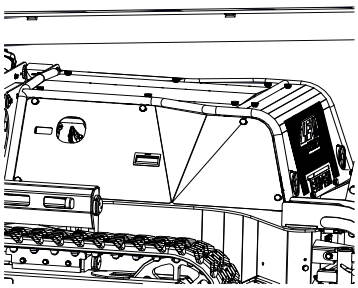

Fig. 31

The combustion engine (Fig.31/1), together with the hydraulic unit, supplies the necessary hydraulic pressure.

5.2.7 Electric motor

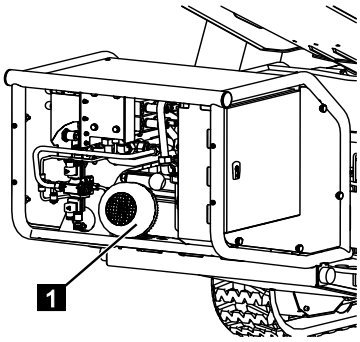

Fig. 32

The necessary hydraulic pressure can also be generated by the electric motor. It is located in the hydraulic unit carrier (Fig.32/1).

Power is supplied by a construction-site feed.

5.3 Operating elements and displays

5.3.1 Outrigger latching

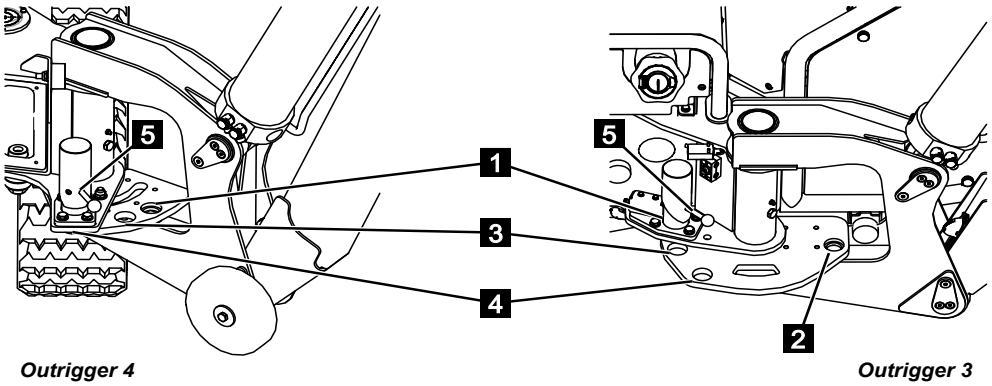

Fig. 33

Using the latching bolt (Fig.33/5), the individual outriggers can be locked in transport position 1 (Fig.33/1), transport position 2 (Fig.33/2), narrow work position (Fig.33/3) or wide work position (Fig.33/4).

5.3.2 Control panel and radio control

Fig. 34

The controls found on the control panel (Fig.34/1) and the radio control (Fig.34/2) are described below.

Control panel

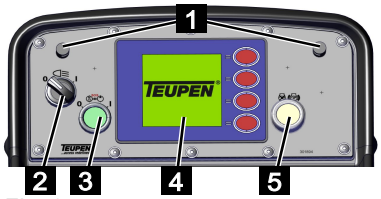

Fig. 35

1 - control panel lighting	The control panel's lighting is always on when the machine is switched on.
2 - toggle switch for working basket lighting	Is used to switch the spotlights on the working basket on and off
3 - button for 12-V auxiliary drive	Switches on the back-up pump
4 - graphic display screen	The graphic display screen shows the movements available with the respective functions as well as machine data, such as operating hours etc. If an impermissible movement is selected, warnings and information messages are shown. The display is also where fault codes and fault descriptors are shown.
5 - illuminated start/stop button	Starts and stops the drive unit.

NOTICE

If the machine features a LI-ION drive, the illuminated button switches between battery and mains power.

Radio control

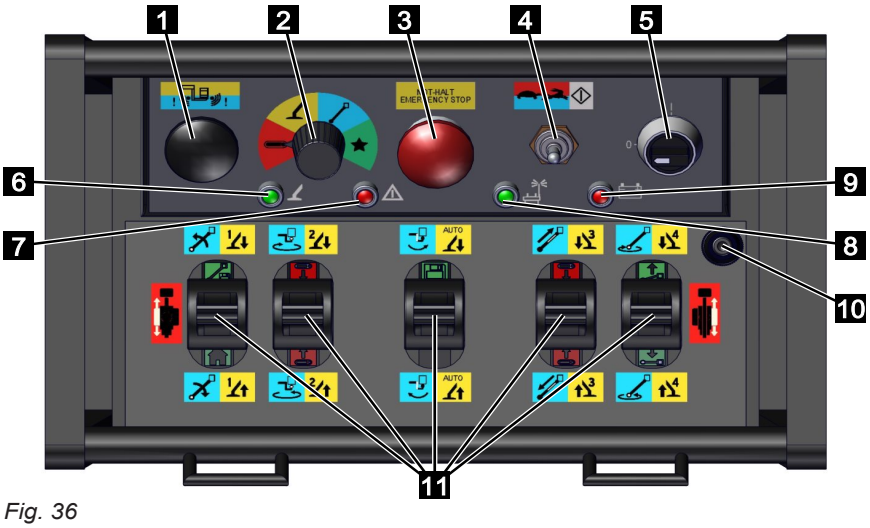

Fig. 36

1 - collision button

The collision button allows movements into ranges in which there is a risk of collision.

2 - function selector

The function selector switches between crawler, outrigger, platform or special mode.

3 - emergency-stop button

There is an emergency-stop button on the control panel. When it has been actuated, it has to be released by pulling it in order to make the machine ready for operation again.

4 - mode selector (crawl/ fast speed, radio connection, horn)

When crawler or platform mode are selected, use the switch to set ‘crawl speed’ or ‘fast speed’.

Enables radio communication between radio control and receiver.

Sounds the horn (accessory).

5 - rotary knob

Is used to switch the radio control on and off.

6 - outrigger lamp (green)

Status	Description
Flashing	Machine is NOT braced correctly
Permanently lit	Machine is braced correctly

7 - fault lamp (red)

If the lamp is on, there is a fault.

8 - radio communication (green)

Status	Description
Flashing rapidly	Radio control not yet enabled
Flashing slowly	Radio control enabled

8 - battery lamp (red) Indicates battery charge level. If the lamp is flashing, you need to change the radio control's battery immediately.

NOTICE

When the battery lamp starts to flash, roughly 15 minutes remain before the battery is completely flat operation will no longer be possible.

10 - radio antenna The radio antenna establishes the connection between the radio control and the receiver.

11 - control levers The control levers can be used to perform the respective colour-coded functions in accordance with the selected operating function and the position of the function selection lever.

5.3.3 Control panel adjustment (optinal)

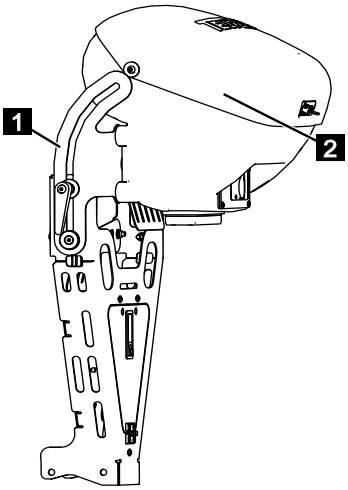

Fig. 37

You can use the control panel adjustment (Fig.37/1) to adjust the height of the control panel (Fig.37/2) to reduce the working platform's required width clearance.

5.3.4 Combustion engine controller

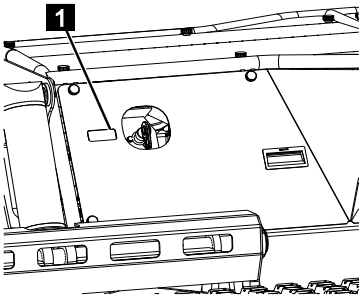

The engine controller is operated directly on the combustion engine (Fig.38/1)

Fig. 38

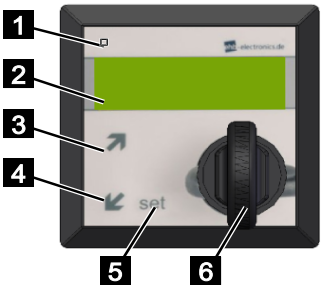

Fig. 39

1 - operation/fault LED	Indicates the operating status. – A green LED indicates everything is OK. – A red LED indicates that there is a fault.
2 - display	Shows the operating status as well as fault messages.
3 - up arrow key	The arrow key can be used to select the next display or increase values.
4 - down arrow key	The arrow key can be used to select the previous display or reduce values.
5 - set key	The set key is used to confirm inputs.
6 - key switch	The key switch is used to start and stop the combustion engine and make settings.

NOTICE

The combustion engine must only be switched on and off using the key switch on the motor control in service mode.

5.3.5 Control box control panels

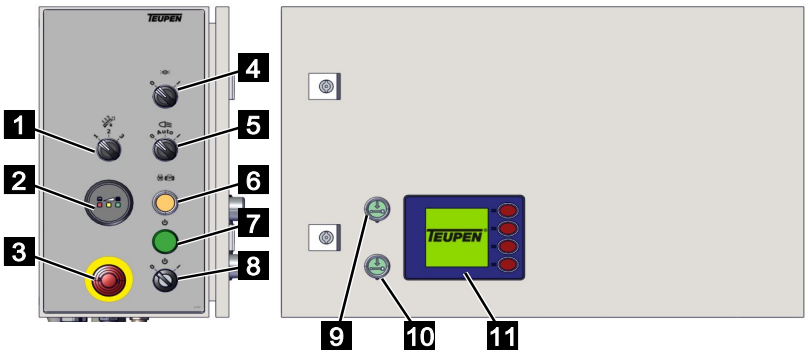

Fig. 40

1 - toggle switch for height limiter (accessories) The height limiter toggle switch allows you to set three different working heights.

2 - battery indicator Indicates the battery capacity.

3 - emergency-stop button There is an emergency-stop button on the control box. When it has been actuated, it has to be released by pulling or turning it in order to make the machine ready for operation again.

4 - strobe lights toggle switch (accessories) Switches the strobe lights on/off

5 - spotlights toggle switch (accessories) Switches the spotlights on the drive unit and lift boom holder on/off

6 - illuminated start/stop button Is used to start and stop the combustion engine.

NOTICE

If the machine features a LI-ION drive, the illuminated button switches between battery and mains power.

7 - standby lamp Shows standby status (on or off).

8 - ignition key switch The ignition key switch enables supplying voltage to the controls.

9 - telescopic boom up (optional) Raises the telescopic boom to allow adjustments to be made to the mount.

10 - telescopic boom down (optional) This button moves the telescopic boom, basket boom and working basket into transport position.

11 - graphic display screen The graphic display screen shows the movements available with the respective functions as well as machine data, such as operating hours etc. If an impermissible movement is selected, warnings and information messages are shown. The display is also where fault codes and fault descriptors are shown.

5.3.6 Emergency control

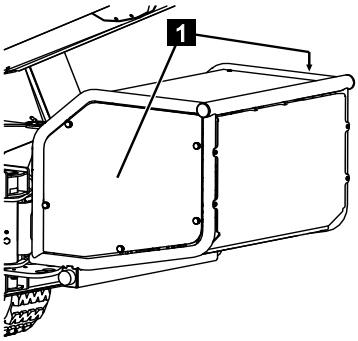

Fig. 41

In the event of a power supply failure, the machine can be operated manually using the valves for platform and outrigger operation. The valves for outrigger and platform operation are located under the cover (Fig.41/1).

5.4 Electrical connections

5.4.1 Feed

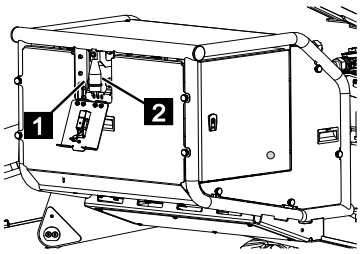

Fig. 42

The electric motor (optional) and the power socket in the working basket are connected to the construction-site power supply via the socket (Fig.42/1). Maximum power feed is 230 V/16 A.

The power socket (Fig.42/2) supplies the power sockets in the working basket. Maximum power feed is 110 V/16 A. (optional)

Observe the maximum cable lengths and cable cross-sections.

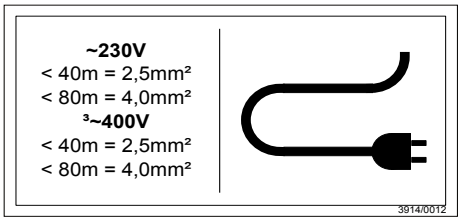

Fig. 43

5.4.2 Power sockets, working basket

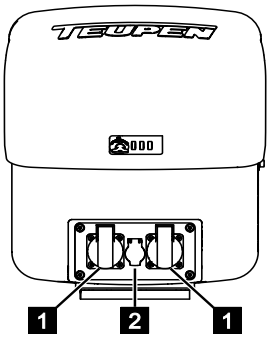

Fig. 44

The power socket's (Fig.44/1) maximum electrical connection values are 230 V/16 A.

The power socket's (Fig.44/2) maximum electrical connection values are 12 V/10 A or 24 V/5 A. (accessories)

5.5 Work areas and danger zones

The work area and danger zones are within and vertically below the swivel range of the machine (see grey area in work diagram).

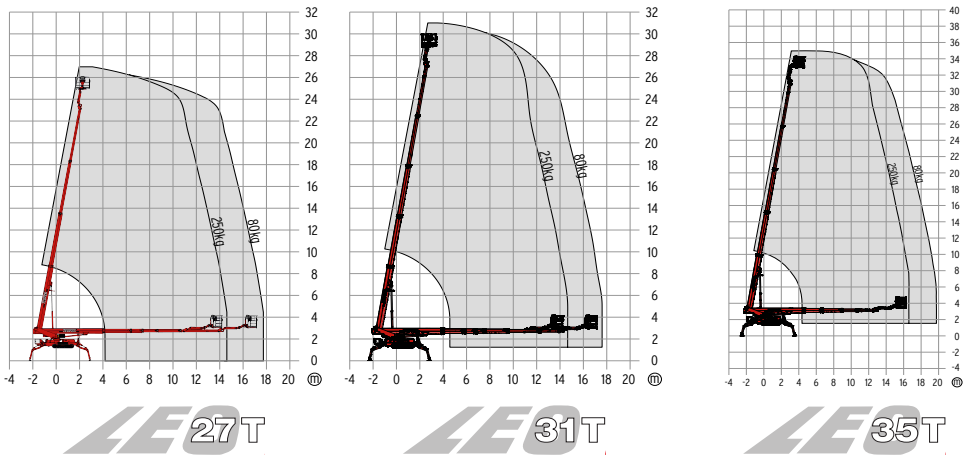

Fig. 45

5.6 Accessories

5.6.1 Accessories (optional)

Safety harness

Wear the safety harness with fall attenuator when performing any work carried out from the working basket. Attach it to the respective fastening points in the working basket.

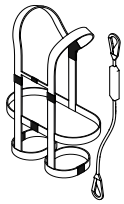

Fig. 46

Lifting device

An optional lifting device can be installed in place of the working basket.

Fig. 47

Ground plates

Ground plates prevent damage to soft floors.

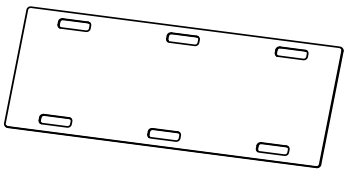

Fig. 48

Flashing lights

Flashing lights for additionally securing the machine.

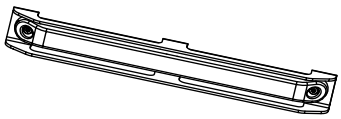

Fig. 49

Construction and function

Spotlights

Spotlights on the drive unit, lift boom holder or working basket

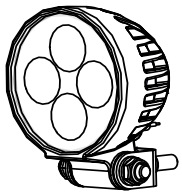

Fig. 50

Transport frame

Transport frame for machines weighing up to 3400 kg.

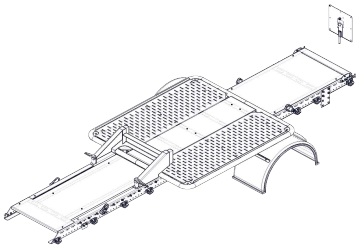

Fig. 51

Trailer

Various trailers for machines weighing up to 3050 kg.

Lashing chains

For securing the machine on the transport frame

Fig. 52

Lashing belts

Lashing belts for securing the machine on a trailer.

Fig. 53

5.6.2 Accessories (included)

Depending on the machine type, the scope of supply may vary.

Keyring

The scope of supply includes a number of keys. These are used to open the control panel, the stowage space or the control box, for example.

Fig. 54

Oil drain hose:

For proper draining of the motor oil or hydraulic oil, the accessories include an oil drain hose. (Not included for all engines.)

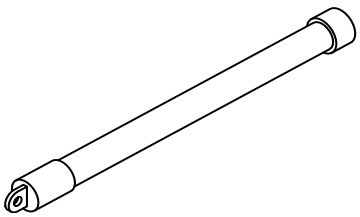

Fig. 55

Button head coupler:

The button head coupler allows tensioning of the crawler tracks.

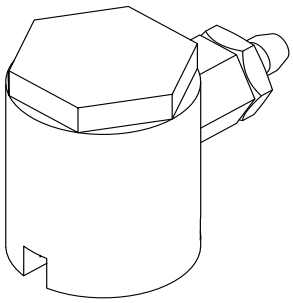

Fig. 56

6 Transportation and storage

6.1 Safety instructions for transportation

Improper transportation

WARNING

Risk to life due to improper transportation!

Improper transportation can cause severe injuries or even death.

- During transportation of the aerial access platform, do not stay in the working basket.
- Heed dimensions of the aerial access platform.
- Never step under or into the swivel range of loads which are up in the air.
- Only move loads under supervision.
- Only use approved lifts and lifting accessories with sufficient carrying capacity.
- Only use the attachment points provided.

6.2 Inspection on receipt of delivery

Inspect the delivery for completeness and transport damage immediately upon receipt.

In the event of externally discernible transport damage, proceed as follows:

- Refuse delivery or accept it under reservation.
- Document the extent of the damage on the transport documents or the transport company's delivery note.
- File a complaint.

NOTICE

Complaints

Complain about any defect as soon as it is detected. Damage claims can only be made within 12 months after acquisition of the machine. Special agreements (e.g. maintenance contract) are possible.

6.3 Attachment points

Transportation by crane

WARNING

Risk of material damage due to improper fastening!

The use of unsuitable attachment points can cause damage to the machine.

– Only use the attachment points specified here.

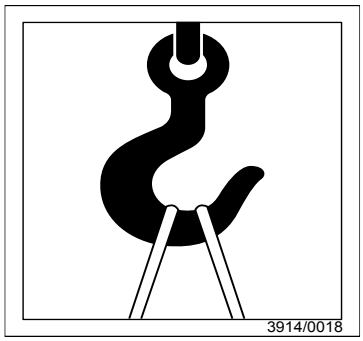

Fig. 57

The crane attachment points are indicated by a crane hook symbol (Fig.57).

Crane attachment points:

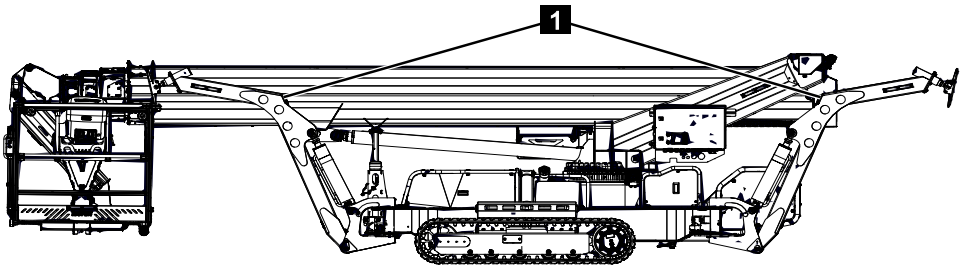

Fig. 58

1	Crane attachment points (on both sides)

Transport pieces can be transported with a crane under the following conditions:

- The crane and lifting gear must be designed for the weight of the aerial lift.
- The operator must be authorised to operate the crane.
- The machine must be in the transport position.
- Belts and chains must be the same length and sufficiently long.
- The machine must be anchored to the means of transport by lifting accessories connected to the specially provided load blocks (Fig.58/1).

Transportation on a trailer/truck

WARNING

Risk of injury due to improper moving of the aerial access platform!

The machine may topple or slip off if moved improperly. This can cause severe injuries and significant material damage.

- The ramp inclination must not exceed the machines maximum permissible climbing ability.
- Whilst loading, do not stand downhill of and to the rear of the aerial access platform.
- Start the ramp in forward drive.
- Do not turn the aerial access platform on the ramp or loading area.

The attachment points for the lashing eyes are marked as shown:

- Attachment point for transportation on a trailer/truck (Fig.59)

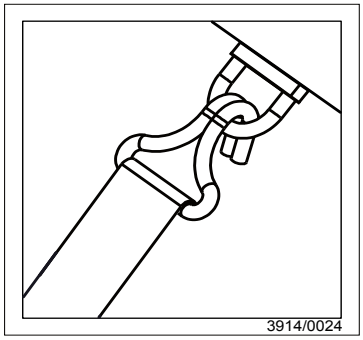

Fig. 59

Lashing eye attachment points:

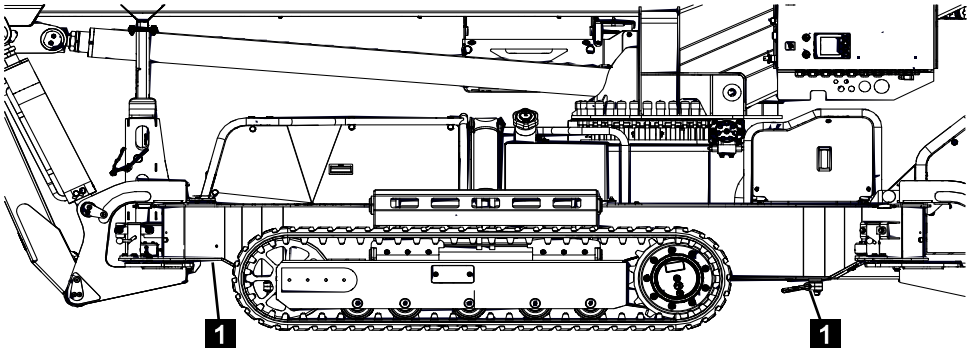

Fig. 60

1	Lashing eye attachment points (on both sides)

The machine can be transported on a trailer or truck under the following conditions:

- The trailer or truck must be designed for the weight and the dimensions of the machine.
- The machine must be in the transport position.
- The machine must be anchored to the means of transport by safety belts or safety chains connected to the specially provided load blocks Lashing eye attachment points 1/1 or 2).

6.4 Storage

Store the machine under the following conditions:

- Do not store outdoors.
- Store dry and dust-free.
- Do not expose to any aggressive media.
- Keep away from direct sunlight.
- Protect from vibrations and impacts.
- Storage temperature: 15 to 35 °C
- Relative humidity: max. 60%
- Disengage battery cut-off switch or unplug battery cut-off connector
- In case of storage longer than 3 months, check the condition of all parts regularly. If necessary, freshen or replace the rust-proofing.

6.5 Transportation on an auxiliary frame for trucks

6.5.1 Loading onto the truck

Personnel:

- Specialist staff

Protective equipment:

- Occupational safety clothing
- Safety shoes

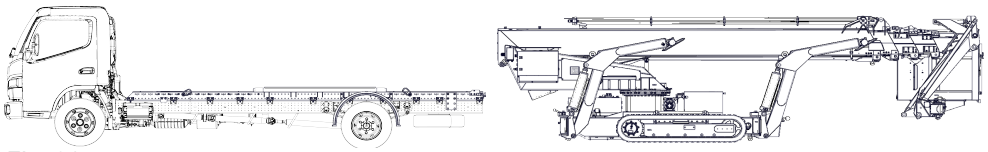

Fig. 61

1. Move working platform to behind the truck as shown (↳Chapter 7.6 „Driving the machine", on page 87).

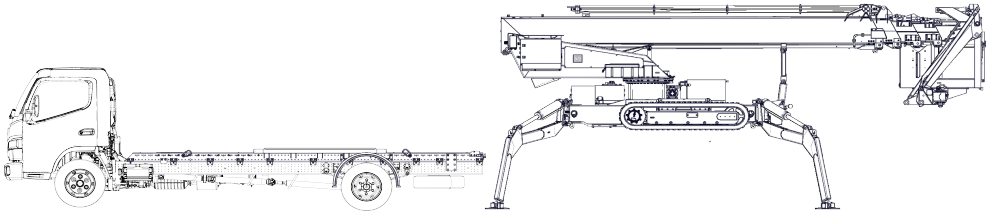

Fig. 62

2. Place working platform on broad bracing and support completely (↳Chapter 7.10 „Operating the bracing", on page 106).
3. Fully retract the crawler chassis (↳Chapter 7.12 „Crawler chassis, height- and width-adjustable", on page 113).

WARNING

Risk of injury during manoeuvring of the transport vehicle!

During manoeuvring, persons can be crushed between the transport vehicle and the working platform. This can cause serious or even fatal injuries.

– Ask another person to monitor the entire danger zone and warn persons or the driver if necessary.
– Keep persons away from the danger zone.

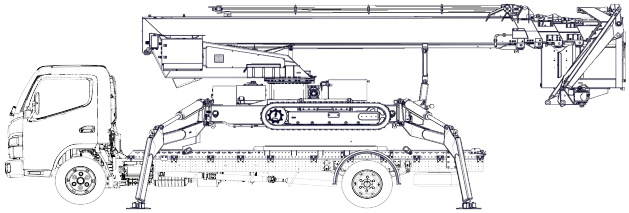

Fig. 63

CAUTION

Risk of collisions!

During underriding of the working platform it is possible for the working platform and the transport vehicle to collide.

– Always ask a second person to monitor the danger zone and warn the driver of the transport vehicle of any possible collision.

4. Move the transport vehicle until it is centred under the working platform and the crawler tracks are centrally flush above the auxiliary frame. Arrows are affixed to the crawler chassis and the auxiliary frame for this purpose.
5. Lower the working platform slowly and move the bracing to the transport position (↳Chapter 7.16 „Moving the bracing into the transport position", on page 126).

6.5.2 Lashing

Personnel:

- Specialist staff

Protective equipment:

- Occupational safety clothing
- Safety shoes

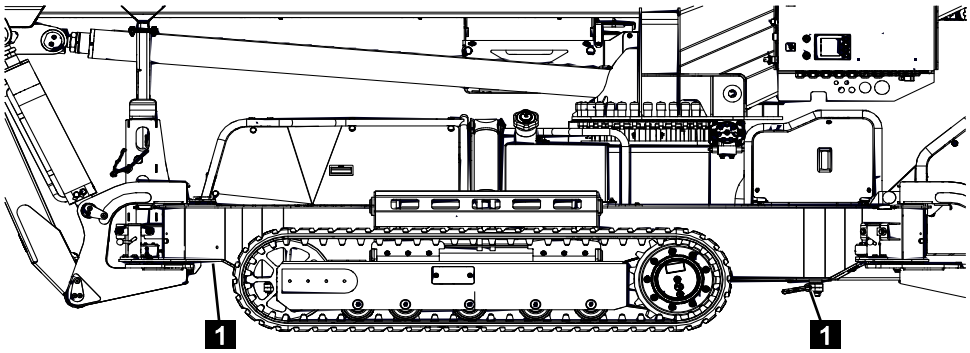

Fig. 64

1. The attachment points on the working platform and the transport frame are labelled with the lashing eye symbol. The lashing points (Fig.64/1) are provided for lashing to the auxiliary frame.

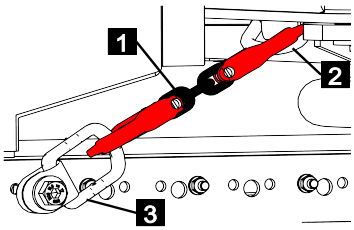

Fig. 65

2. Hook lashing chains (Fig.65/1) to the attachment points of the working platform (Fig.65/2) and the auxiliary frame (Fig.65/3) at all four attachment points.
3. Make sure that all four lashing chains are connected correctly.
4. Using the crawler chassis, lift the working platform until the function stops automatically and the lashing chains are tensioned (↳Chapter 7.12 „Crawler chassis, height- and width-adjustable", on page 113).

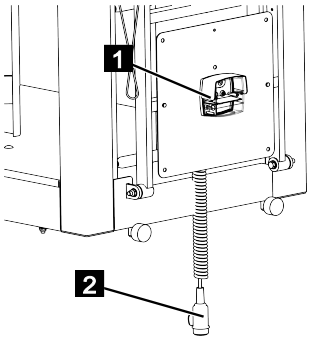

Fig. 66

5. Screw the supplied lighting system (Fig.66/1) to the working basket and connect the connector of the spiral cable (Fig.66/2) to the 12V socket of the truck.

WARNING

Risk of injury from falling parts!

While the transport vehicle is driving, loose or non-attached parts can fall onto the road and injure persons and/or damage other vehicles.

– Before pulling away, always check the transport vehicle and working platform for loose or non-attached parts and remove them.
– Seal all stowage spaces and flaps.

7 Operation

7.1 Safety instructions for operation

Improper operation

WARNING

Risk of injury due to improper operation!

Improper operation can cause severe injuries and significant property damage.

- Execute all operating steps according to the details and instructions in these instructions.
- Always perform any work as a pair, with the help of a second person.
- Prior to starting any work, ensure all covers and safety devices are installed and in full working order.
- Never take safety devices out of service or bypass during operation.
- Make sure that there are no persons in the danger zone.

7.2 Connecting the machine to the mains supply

Personnel:

- Trained persons

Protective equipment:

- Occupational safety clothing
- Safety boots
- Safety helmet

Electrical current

DANGER

Risk of fatal injury due to electrical current!

There is a direct risk of fatal injury due to electric shock in case of contact with live parts. Damage to the insulation or individual components may represent a risk of fatal injury.

- In case of damage to the insulation, switch off the voltage supply immediately and have the machine repaired.
- Before performing work on live parts, pull the mains plug.
- Never bypass or disable any fuses or circuit breakers. When changing fuses or circuit breakers, make sure that the ampere rating is correct.
- Keep moisture away from parts which are live with voltage. It may cause a short-circuit.

Connecting the machine to the mains supply

1. Open the flap (Fig.67/1) and connect the extension cable to the connector. Observe the maximum cable lengths.

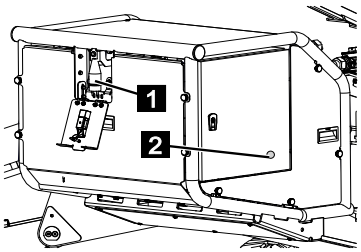

Fig. 67

Cable lengths and cable cross-sections

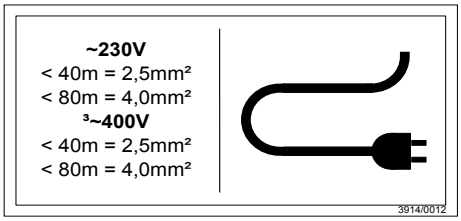

Fig. 68

Disconnecting the machine from the mains supply

2. To disconnect the machine from the mains supply, unplug the extension cable from the connector.

7.3 Switching the machine on/off

Personnel:

- Trained personnel

Protective equipment:

- Occupational safety clothing
- Safety shoes
- Safety helmet

Power is supplied either by the mains (construction site feed) using an extension cable, by the combustion engine or by the battery drive.

7.3.1 Switching the radio control on/off

Preparation

Fig. 69

1. Make sure that the emergency stop button (Fig.69/1) on the control box has not been actuated.
2. Turn the ignition key (Fig.69/2) clockwise to position *[1]*.

Switching on

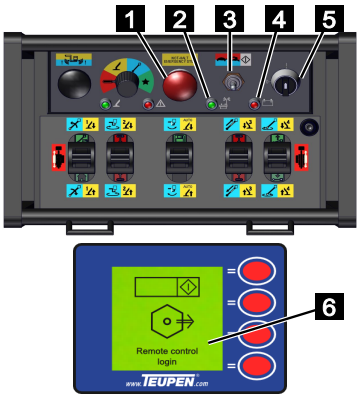

Fig. 70

3. Make sure that the emergency stop button on the radio control (Fig.70/1) has not been actuated.
4. To switch on the radio control, turn the rotary knob (Fig.70/5) clockwise to *[I]*.
   - The radio control beeps 2x, the rechargeable battery lamp (Fig.70/4) flashes 2x.
   - The radio connection lamp (Fig.70/2) flashes rapidly.
5. The display shows the message “Log in radio control” (Fig.70/6). Push the rocker switch (Fig.70/3) to the right to the *[Start]* position.
   - The radio control is logged in on the receiver.
   - The radio connection lamp (Fig.70/2) flashes slowly.

NOTICE

After radio contact has been interrupted (e.g. due to changing the rechargeable battery), the radio control has to be logged back in on the receiver by pushing the rocker switch (Fig.70/3) to the *[Start]* position.

Switching off

Fig. 71

6. To switch off the radio control, turn the rotary knob (Fig.71/1) anti-clockwise to *[0]*.

Fig. 72

7. Turn the ignition switch (Fig.72/1) anti-clockwise to position *[0]*.

7.3.2 Switching the machine on/off via the mains supply

7.3.2.1 Switching the machine on/off via the mains supply and combustion engine

Switching on

1. Connect the machine to the mains supply (↳Chapter 7.2 „Connecting the machine to the mains supply", on page 71).
2. To begin operations, you first need to switch on the radio control. Radio control (↳Chapter 7.3.1 „Switching the radio control on/off", on page 73).

Switching off

3. To switch off the machine, you need to switch off the radio control (↳Chapter 7.3.1 „Switching the radio control on/off", on page 73).

7.3.3 Switching the machine on/off using the combustion engine

NOTICE

The machine cannot be switched on while the radio control is off.

NOTICE

Risk of voltage drop on the starter battery!

Starting up the combustion engine frequently can cause a voltage drop on the starter battery.

– Frequent starts of the combustion engine should be avoided.

Switching on

1. Check the motor oil level (↳Chapter 11.4 „Drive units", on page 258).
2. Switch on the radio control (↳Chapter 7.3.1 „Switching the radio control on/off", on page 73).

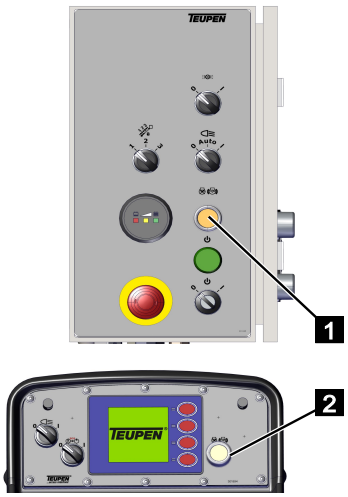

Fig. 73

3. To start, press and hold the illuminated button (Fig.73/1) on the control box or (Fig.73/2) on the control panel for at least 2 seconds.

NOTICE

The starting up process on a diesel engine may take longer as it has an automatic temperature-controlled preheating unit.
- The illuminated button flashes during the start-up process.
- The illuminated button lights up constantly when the engine is running.

Switching off

4. To switch off the combustion engine, press and hold the illuminated button (Fig.73/1) on the control box or (Fig.73/2) on the control panel until the combustion engine stops.

7.4 Shutting down in case of emergency

In dangerous situations, component movements must be stopped as quickly as possible and the power supply must be shut off.

In case of emergency, proceed as follows:

1. Immediately trigger an emergency stop with the emergency stop device.
2. If there is no risk to your own health, rescue people from the danger zone.
3. Provide first aid as necessary.
4. Alert the fire brigade and/or rescue service.
5. Inform the responsible party at the location of use.
6. Switching off the machine and securing it against restart

7.5 Principles of the graphic display screen

7.5.1 Overview

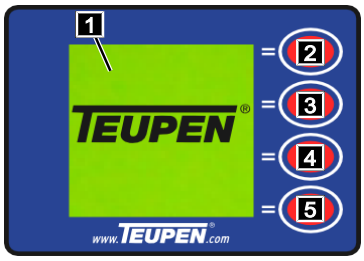

Fig. 74

The graphic display screen comprises the 4 *[function keys]* (Fig.74/2-5) and the display screen (Fig.74/1). The graphic display screen starts up when the machine is switched on. The display is automatically updated in line with current situation of the machine. The *[function keys]* (Fig.74/2-5) are used to navigate through the menu. The assignment of the *[function keys]* is shown on the display screen.

The display screen also shows operating statuses and information on faults. Refer to:

- (↳Chapter 7.5.7.4 „Additional information messages regarding machine status", on page 85)
- Fault code list

7.5.2 Possible assignment of the function keys

The assignment of the *[function keys]* depends on the current menu.

The meaning of the symbols:

Symbol	Meaning
←	One level back
↑	Up/back
↓	Down/next
—	Reduce value
+	Increase value
OK	Confirm input
? ?	Information message
⚠	Warning

7.5.3 Examples of the operating modes

7.5.3.1 Crawler function

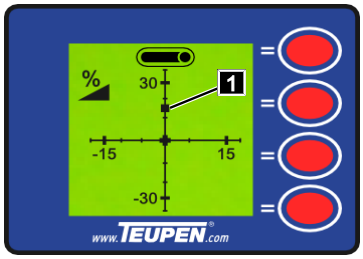

Fig. 75

In crawler mode, the machine's horizontal and vertical inclination is shown by item (Fig.75/1) on the coordinate axes.

7.5.3.2 Outrigger function

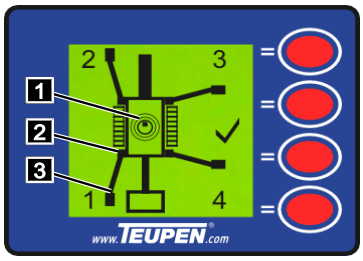

Fig. 76

Position	Meaning
1	Circular level
2	Outrigger locking mechanism
3	Floor pressure

In the outrigger function operating mode the orientation of the individual outriggers and their correct bracing is indicated.

In this case:

Narrow on one side, correctly levelled (Fig.76/1), outriggers locked (Fig.76/2), floor pressure sufficient (Fig.76/3). The correct bracing is indicated by a check mark.

7.5.3.3 Platform function

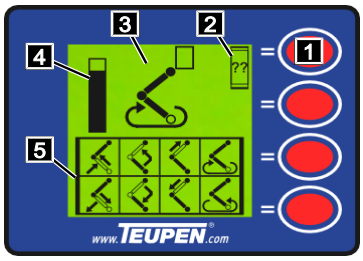

Fig. 77

In platform function operating mode, the movements currently available to be activated with the operating levers are shown with the lower 8 pictograms (Fig.77/5). When the limit stop for a platform function is reached, a large pictogram (Fig.77/3) is shown for the limited movement. A bar graph (Fig.77/4) also shows the remaining clearance to the limit stop.

An message symbol (Fig.77/2) appears when an illegal movement is selected.

1. Call up the respective message using the *[function key]* (Fig.77/1).

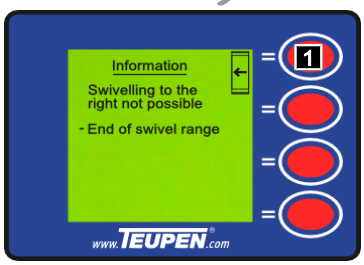

Fig. 78

2. Use the *[function key]* (Fig.78/1) to return to the previous level.

Examples

The display screen provides the operator with help, e.g. finding the transport position (x and y), and provides helpful information for operation.

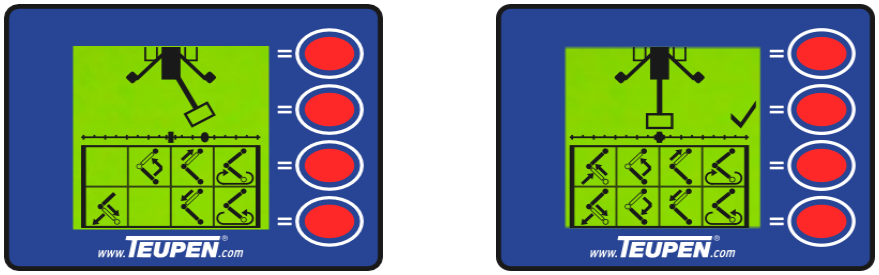

Fig. 79

As soon as the telescopic boom is straight above the telescopic boom support, a tick (Fig.79/right) appears in the display to signal this.

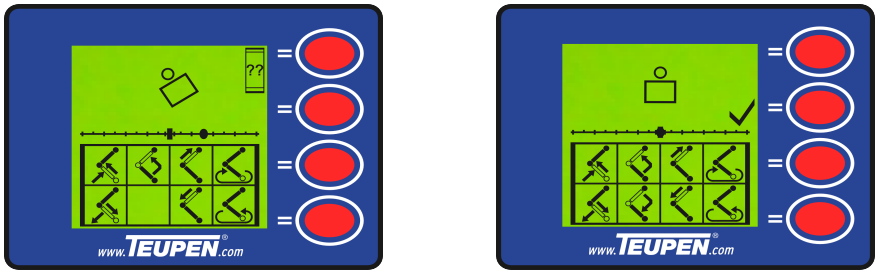

Fig. 80

As soon as the working basket is in the work position, a tick (Fig.80/right) appears in the display to signal this.

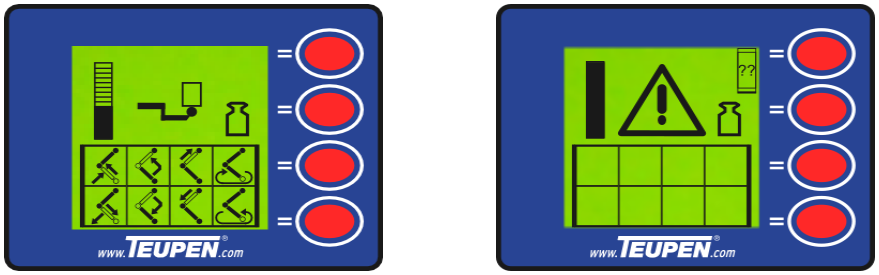

Fig. 81

As soon as the permitted basket weight has been exceeded, the display screen indicates this (Fig.81/right). Platform movements are then no longer possible.

7.5.4 Main menu

NOTICE

Press the *[function key]* (Fig.81/4) in normal mode to call up the main menu.

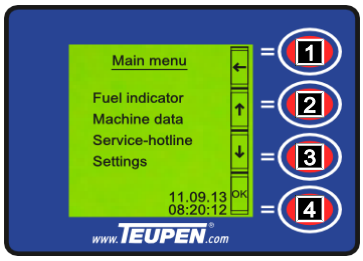

Fig. 82

The machine data menu comprises 2 displays and 2 submenus:

- Display: Operating hours
- Display: Motor hours
- Submenu: Serial number
- Submenu: Versions

The selected submenu is shown with a grey background.

1. Use the *[function keys]* (Fig.82/2 and 3) to select a submenu.
2. Access the selected submenu with the *[function key]* (Fig.82/4).
3. Return to the previous screen with *[function key]* (Fig.82/1).

7.5.4.1 Fuel indicator

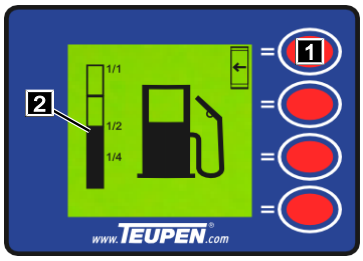

Fig. 83

The fuel level is indicated by the column (Fig.83/2).

1. Return to the main menu with *[function key]* (Fig.83/1).

7.5.5 Machine data

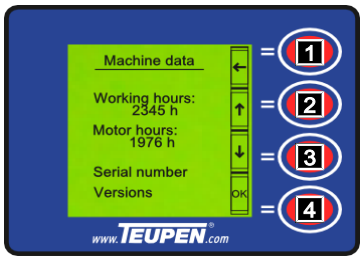

Fig. 84

The machine data menu comprises 2 displays and 2 submenus:

- Display: Operating hours
- Display: Motor hours
- Submenu: Serial number
- Submenu: Versions

The selected submenu is shown with a grey background.

1. Use the *[function keys]* (Fig.84/2 and 3) to select a submenu.
2. Access the selected submenu with the *[function key]* (Fig.84/4).
3. Return to the *[main menu]* with *[function key]* (Fig.84/1).

7.5.5.1 Serial number

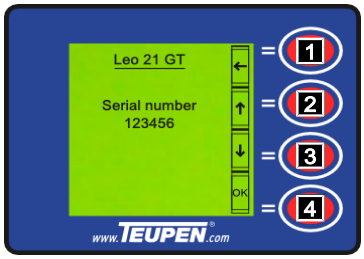

Fig. 85

The serial number menu shows the machine type and the machine's serial number.

1. Use the *[function key]* (Fig.85/1) to return to the machine data menu.

7.5.5.2 Version

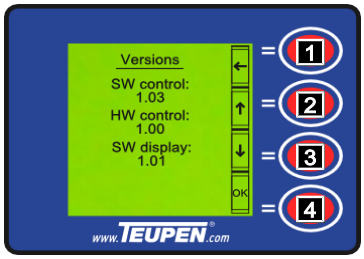

Fig. 86

The versions menu displays the following software and hardware versions:

- Controller software version
- Controller hardware version
- Display screen software version

1. Use the *[function key]* (Fig.86/1) to return to the machine data menu.

7.5.6 Service hotline

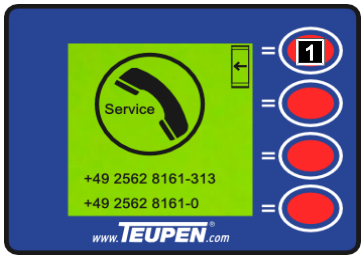

Fig. 87

The service hotline menu displays the telephone number of the respective service company.

1. Return to the main menu with *[function key]* (Fig.87/1).

7.5.7 Settings

Password entry

To access the *Settings* menu, you need to enter a password.

NOTICE

The factory setting for the password on delivery is: 2468

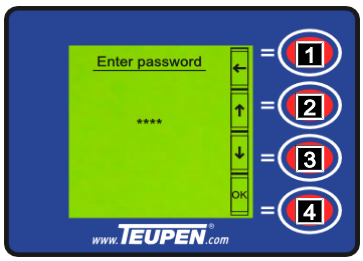

Fig. 88

1. Press the *[function key]* (Fig.88/4).
   – The cursor flashes on the first digit.
2. Select the desired digit with the *[function keys]* (Fig.88/2 and 3).
3. Use the *[function key]* (Fig.88/4) to confirm the selected digit.
   – The cursor moves to the next digit.
4. Enter the next digits in the same manner.

NOTICE

If the password is correct, the settings menu opens once the last digit has been confirmed.

If the password is entered incorrectly, enter it again as described above.

Alternatively:

5. Use the *[function key]* (Fig.88/1) to return to the main menu.

Settings menu

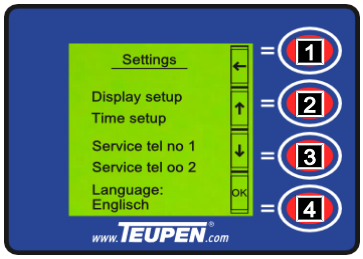

Fig. 89

The settings menu comprises 4 submenus:

- Display setup
- Time setup
- Service hotline number 1
- Service hotline number 2
- Language

The selected submenu is shown with a grey background.

6. Use the *[function keys]* (Fig.89/2 and 3) to select a submenu.
7. Access the selected submenu with the *[function key]* (Fig.89/4).
8. Return to the main menu with *[function key]* (Fig.89/1).

7.5.7.1 Display setup

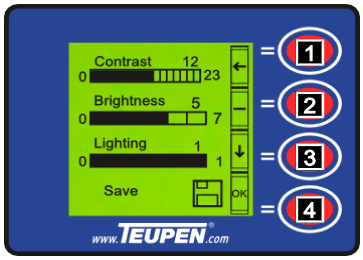

Fig. 90

The time setup menu is used to make the following settings:

- Time
- Date
- Day of the week

The selected setting is shown in with a grey background.

1. Select the desired setting with the *[function keys]* (Fig.90/2 and 3).
2. Use the *[function key]* (Fig.90/4) to confirm the selected setting.
   – The cursor flashes on the first setting option (e. g. hours).
3. *[Function key]* (Fig.90/2) increases the desired setting's value. *[Function key]* (Fig.90/3) reduces the desired setting's value.
4. Use the *[function key]* (Fig.90/4) to confirm the value.
   – The cursor jumps to the next setting option (e.g. minutes).

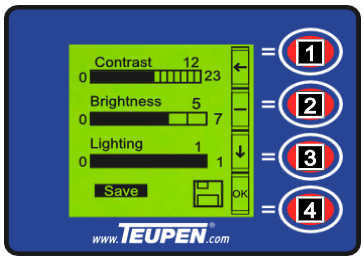

Fig. 91

5. All other settings are made in the same manner.
6. Use the *[function keys]* (Fig.91/2 and 3) to move the cursor to *save*.
7. Use the *[function key]* (Fig.91/4) to confirm the settings.
8. Use the *[function key]* (Fig.91/1) to return to the settings menu.

7.5.7.2 Service telephone number

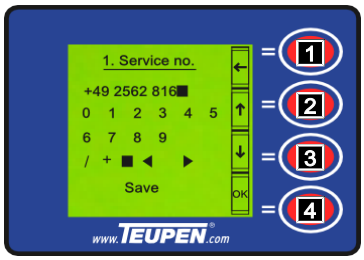

Fig. 92

1. Use the [function keys] (Fig.92/2 and 3) to select the desired digit or special character.
2. Use the [function key] (Fig.92/4) to confirm the selection.
3. All other inputs are made in the same manner.

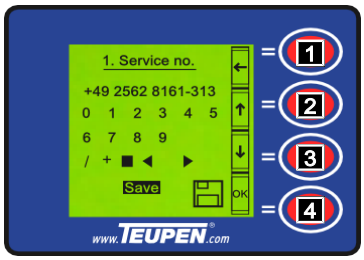

Fig. 93

4. Use the *[function keys]* (Fig.93/2 and 3) to move the cursor to *save*.
5. Use the *[function key]* (Fig.93/4) to confirm the settings.
6. Use the *[function key]* (Fig.93/1) to return to the *settings* menu.

7.5.7.3 Setting the language

NOTICE

The language is set directly in the settings menu.

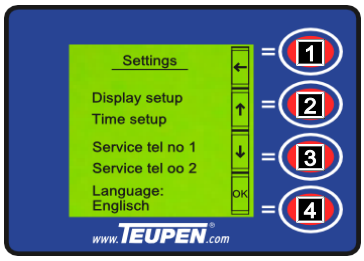

Fig. 94

1. Select the desired language with the *[function keys]* (Fig.94/2 and 3).
2. Press the *[function key]* (Fig.94/4).
   – The language flashes.
3. Select the desired language with the *[function keys]* (Fig.94/2 and 3).
4. Use the *[function key]* (Fig.94/4) to confirm the selected language.

7.5.7.4 Additional information messages regarding machine status

The following additional information messages may be shown during operation:

Lower control

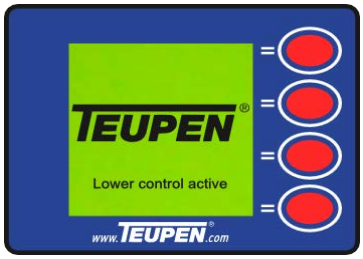

Fig. 95

- Lower control active.
  - The control panel is deactivated and the machine can only be operated from the lower control or using the cable remote control.

Fill up with fuel

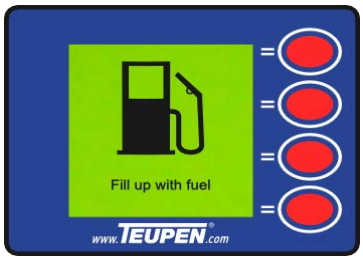

Fig. 96

- Fuel is getting low.
  - Fill up as soon as possible.

Check oil level

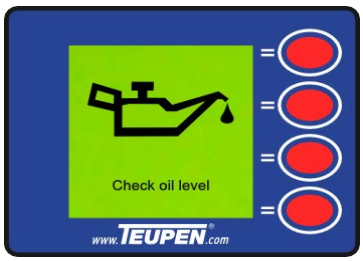

Fig. 97

- Oil pressure is low. Oil level may be too low.
  - Check the oil level (↳Chapter 11.4 „Drive units”, on page 258).

Soiling display for hydraulic filter

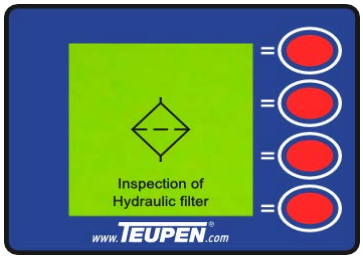

Fig. 98

- The hydraulic filter is soiled.

– Replace the hydraulic filter (↳Chapter 8.2.5 „Replace the hydraulic filter", on page 188).

Engine controller alarm output

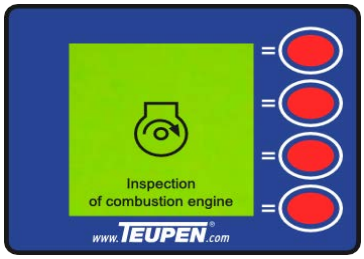

Fig. 99

- Fault on the engine controller.
  – Stop operation. Call service.

Water temp high

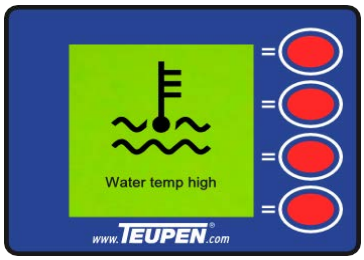

Fig. 100

- The cooling water temperature is too high.
  – Stop operation. Call service.

Fault message

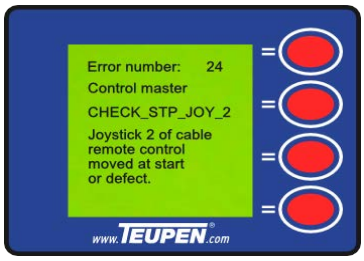

Fig. 101

- Various fault messages. They are used primarily to help service staff to detect and clear faults. Fault code list

7.6 Driving the machine

Personnel:

- Trained persons

Protective equipment:

- Occupational safety clothing
- Safety boots
- Safety helmet
- Safety harness

WARNING

Risk of injury from moving the aerial access platform improperly!

The machine may topple or slip off if moved improperly. This can cause severe injuries and significant material damage.

- Only move the machine in transport position.
- When driving the machine from inside the working basket, wear a safety harness fastened to the fastening points in the working basket.
- Beware of the openings in the floor when travelling.
- Do not drive over materials with sharp edges.
- Do not make any abrupt changes of direction.
- When stopping on an incline, secure the machine against rolling away.
- Make sure that the ladder is folded up and locked.
- When moving across an incline, keep clear of the downward slope side next to the aerial access platform.
- When driving up an incline, keep clear of the area down slope of the aerial access platform.
- Only go up slopes by moving forwards.
- Only go down slopes by moving backwards.
- Prevent the crawler tracks from coming into contact with oil, petrol, diesel and salt. Clean them afterwards as necessary.

7.6.1 Driving the machine using the controls

1. Switch on the machine (↳Chapter 7.3 „Switching the machine on/off", on page 73).

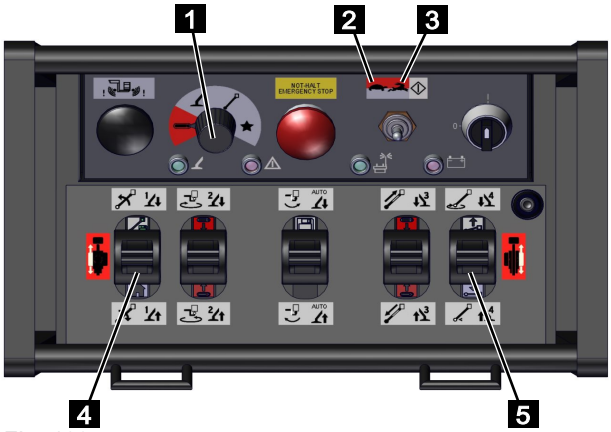

Fig. 102

2. Set the function selection switch to *[crawler function]* (red) (Fig.102/1).
3. Use the mode selector to select *[crawl speed]* (Fig.102/2) or *[fast speed]* (Fig.102/3).
4. Use the control levers (Fig.102/4 and 5) to move the machine as shown in the following table.

NOTICE

You can adjust the travel speed by moving the control levers slowly.

Since the crawl speed has the most force and power, we recommend using it on tight turning radius.

WARNING

Risk of injury if the speed is not adjusted when driving up- or downhill!

If the speed is not adjusted when driving the aerial lift up or down inclined terrain, the machine may topple or slip. This can cause severe injuries or even death and significant material damage.

– When on slopes or inclines, drive machine only at crawl speed.

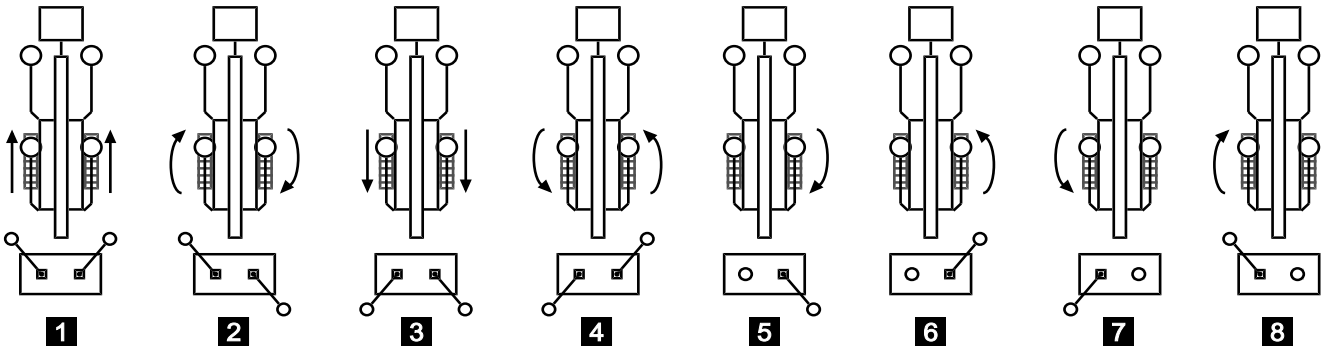

Fig. 103

No.	Operation	Effect
1	Push both control levers forwards.	The machine travels forwards.
2	Push the left-hand control lever forwards and pull the right-hand control lever back.	The machine turns clockwise on the spot.
3	Pull both control levers back.	The machine reverses.
4	Pull the left-hand control lever back and push the right-hand control lever forwards.	The machine turns anti-clockwise on the spot.
5	Pull back only the right-hand control lever.	The machine reverses and turns clockwise.
6	Push forward only the right-hand control lever.	The machine travels forwards and turns anti-clockwise.
7	Pull back only the left-hand control lever.	The machine reverses and turns anti-clockwise.
8	Push forward only the left-hand control lever.	The machine travels forwards and turns clockwise.

NOTICE

Depending on the conditions of the ground, the possible turning circle may vary in size. Small turning circles subject the crawler track to higher levels of strain and cause it to wear out more quickly.

7.6.2 Driving the machine along a slope

WARNING

Risk of injury due to improper operation!

The machine may topple or slip if driven improperly.

- Remaining in the working basket when the machine is driving on a slope is prohibited.
- Observe the machine's maximum tilt angle (Fig.103).
- Always keep clear of the down slope side of the machine.

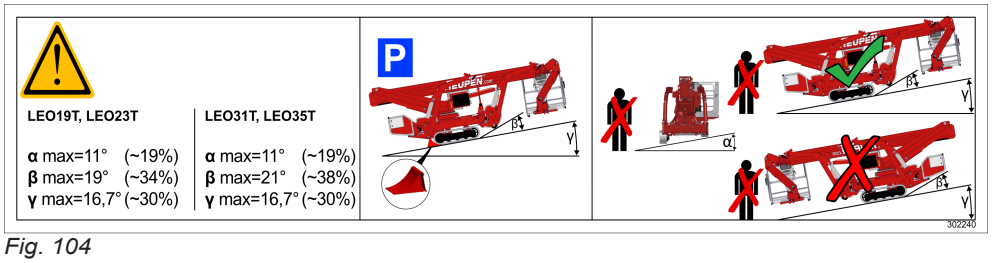

Fig. 104

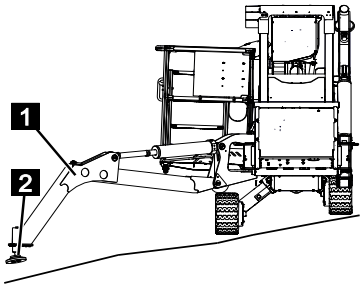

Fig. 105

1. Level the machine using the crawler chassis (↳Chapter 7.12 „Crawler chassis, height- and width-adjustable", on page 113). Observe the machine's maximum tilt angle when doing so.
2. Move the outriggers (Fig.105/1) on the down slope side into the wide or narrow bracing position (↳Chapter 7.11 „Adjusting and operating the outriggers for bracing", on page 111) and lower them.
3. Make sure that the bracing pads (Fig.105/2) remain just above the ground if possible.

7.6.3 Driving the machine over ridges

WARNING

Risk of fatal injury due to incorrect operation!

The machine may topple if driven over excessively high height differences. This can cause serious or even fatal injuries.

- When driving over terrain with height changes, the crawler chassis must be retracted.
- Remaining in the working basket when the machine is driving over a ridge is prohibited.
- Never stand in the danger zone (toppling range) of the machine.
- Observe the maximum height difference when driving over a ridge (max. ridge height X = 100 mm (Fig.105/X).
- – Approach the ridge at an angle as close to a right angle as possible.

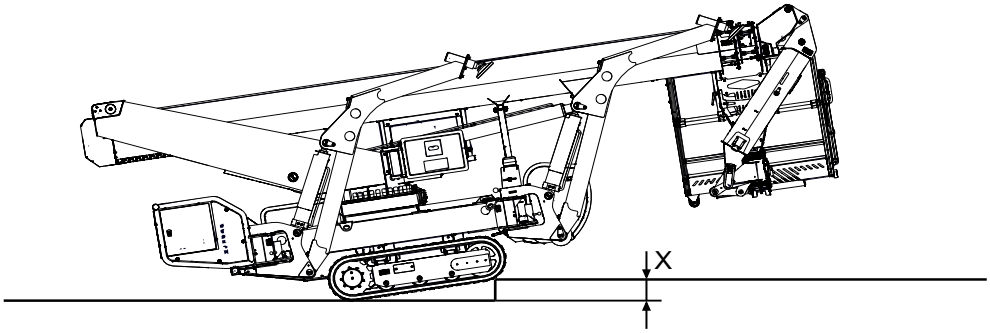

Fig. 106

1. Retract the crawler chassis (↳Chapter 7.12 „Crawler chassis, height- and width-adjustable", on page 113).
2. Move machine to transport position (↳Chapter 7.15 „Moving the platform assembly into transport position", on page 123).
3. Make sure that the height of the ridge (Fig.106/X) you wish to drive over does not exceed 100 mm.
4. Approach the ridge at an angle as close to a right angle as possible (↳Chapter 7.6 „Driving the machine", on page 87).

7.6.4 Driving the machine up inclines

WARNING

Risk of fatal injury due to incorrect operation!

The machine may topple if driven over excessively high height differences. This can cause serious or even fatal injuries.

- Remaining in the working basket when the machine is up or down a slope is prohibited.
- Never stand in the danger zone (toppling range) of the machine.
- Observe the machine's maximum tilt angle (Fig.106).
- Approach the ridge at an angle as close to a right angle as possible.

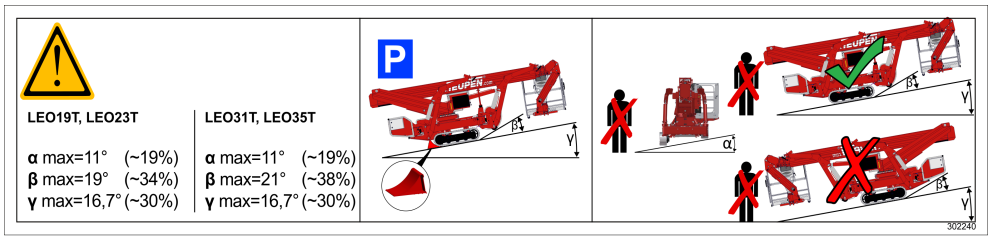

Fig. 107

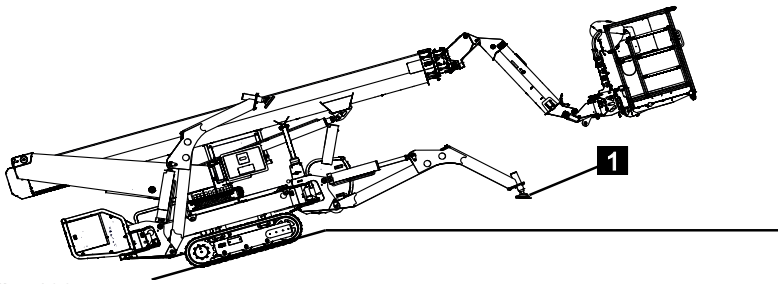

Fig. 108

1. Move the working basket into the work position (↳Chapter 7.8 „Moving the working basket into the work position (optional)", on page 98).
2. Retract the crawler chassis (↳Chapter 7.12 „Crawler chassis, height- and width-adjustable", on page 113).
3. Extend the desired outriggers (↳Chapter 7.9 „Moving the bracing into the work position", on page 101) for bracing (↳Chapter 7.11 „Adjusting and operating the outriggers for bracing", on page 111).
4. Approach the ridge at an angle as close to a right angle as possible (↳Chapter 7.6 „Driving the machine", on page 87).
5. Make sure that the bracing pads (Fig.108/1) remain just above the ground if possible.

7.7 Adjusting the telescopic boom support

Personnel:

- Trained persons

Protective equipment:

- Occupational safety clothing
- Safety boots
- Safety helmet

When driving on slopes or during transport, for example, it may be necessary to lift the telescopic boom slightly. In order for it to rest securely in place whilst travelling, the height of the telescopic boom support can be set to one of three levels.

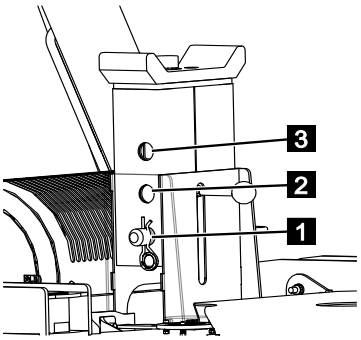

Fig. 109

7.7.1 Adjusting the telescopic boom support using the control box (optional)

1. Move the working basket into the work position (Chapter 7.8 „Moving the working basket into the work position (optional)", on page 98).
2. Press and hold the *[button]* (Fig.110/1) until the profile package lifts and then stops by itself.

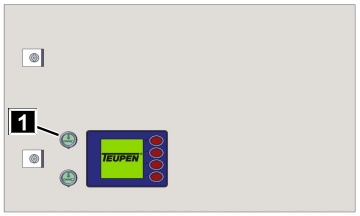

Fig. 110

3. Pull the spring cotter pin (Fig.111/1) out of the fastening bolt (Fig.111/2).
4. Pull out the fastening bolt (Fig.111/2).

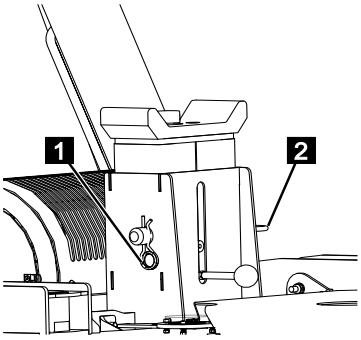

Fig. 111

Operation

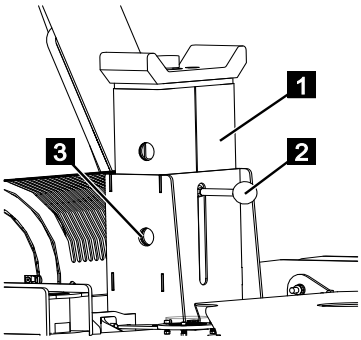

Fig. 112

5. Pull the telescopic boom support (Fig.112/1) upwards by the handle (Fig.112/2) until the desired holes (Fig.112/3) align.

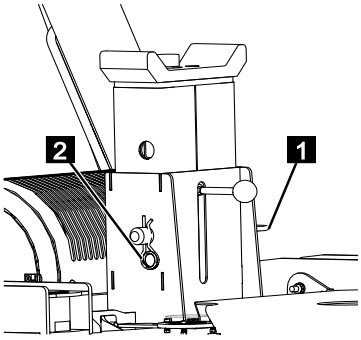

Fig. 113

6. Insert the fastening bolt (Fig.113/1) and secure it with the spring cotter pin (Fig.113/2).

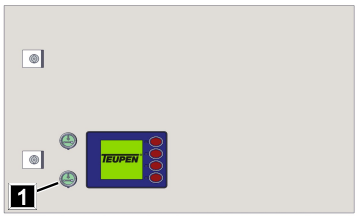

Fig. 114

7. Press and hold the *[button]* (Fig.114/1) until the profile package rests fully on the transport support and all movements have stopped.

7.7.2 Adjusting the telescopic boom support using the radio control

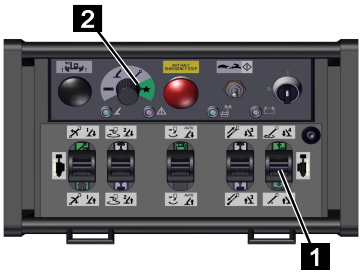

Fig. 115

1. Move the working basket into the work position (Chapter 7.8 „Moving the working basket into the work position (optional)", on page 98).
2. Set the function selector to *[special function]* (green) (Fig.115/2).
3. Push the control lever (Fig.115/1) forwards until the profile package lifts and then stops moving again.

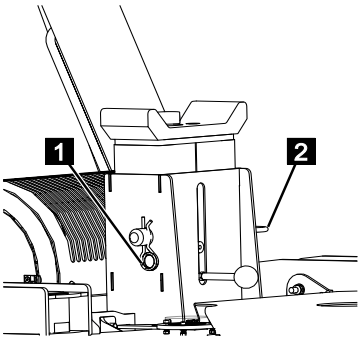

Fig. 116

4. Pull the spring cotter pin (Fig.116/1) out of the fastening bolt (Fig.116/2).
5. Pull out the fastening bolt (Fig.116/2).

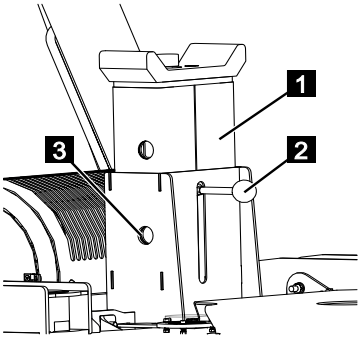

Fig. 117

6. Pull the telescopic boom support (Fig.117/1) upwards by the handle (Fig.117/2) until the desired holes (Fig.117/3) align.

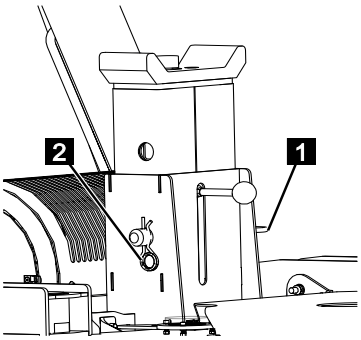

Fig. 118

7. Insert the fastening bolt (Fig.118/1) and secure it with the spring cotter pin (Fig.118/2).

Operation

Fig. 119

8. Pull the control lever (Fig.119/1) back until the profile package rests fully on the transport support and all movements have stopped.

7.8 Moving the working basket into the work position (optional)

Personnel:

- Trained persons

Protective equipment:

- Occupational safety clothing
- Safety boots
- Safety helmet

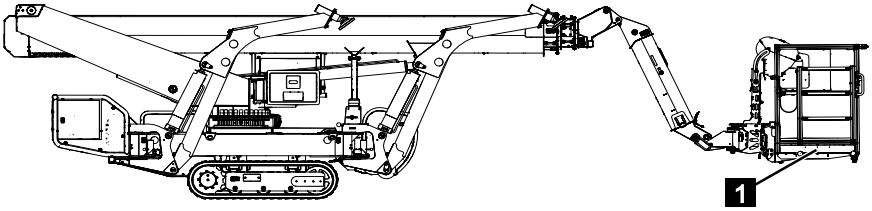

Fig. 120

When adjusting the transport support, for example, you need to move the working basket to the work position (Fig.120/1).

7.8.1 Moving the working basket to the work position using the control box

NOTICE

The working basket can only be moved to the work position if the load in the working basket does not exceed 40 kg.

1. Make sure that the load in the working basket does not exceed 40 kg.
2. Machine is in transport position (↳Chapter 7.15 „Moving the platform assembly into transport position", on page 123).
3. Switch on the machine (↳Chapter 7.3 „Switching the machine on/off", on page 73).
4. Press and hold the *[button]* (Fig.121/1) until the work position has been reached.

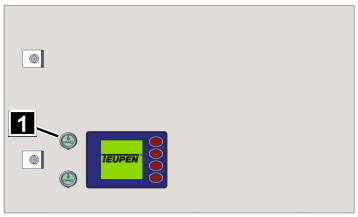

Fig. 121

7.8.2 Moving the working basket to the work position using the radio control

NOTICE

The working basket can only be moved to the work position if the load in the working basket does not exceed 40 kg.

1. Make sure that the load in the working basket does not exceed 40 kg.
2. Machine is in transport position (Chapter 7.15 „Moving the platform assembly into transport position", on page 123).
3. Switch on the machine (Chapter 7.3 „Switching the machine on/off", on page 73).
4. Set the function selector to *[special function]* (green) (Fig.122/2).
5. Push the control lever (Fig.122/1) forwards until the work position has been reached.

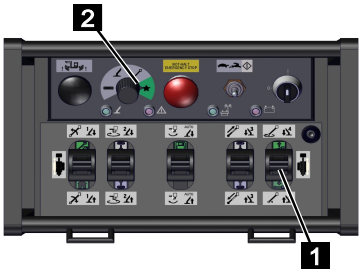

Fig. 122

NOTICE

Operations performed using the radio control always override any commands given using the control box.

7.9 Moving the bracing into the work position

Bracing variants

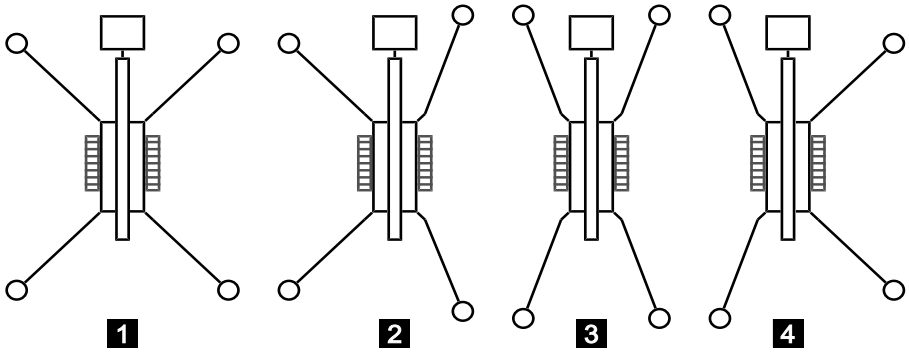

Fig. 123

No.	Bracing variants
1	Wide
2	Wide-narrow
3	Narrow
4	Narrow-wide

7.9.1 Adjusting a bracing

Personnel:

- Trained persons

Protective equipment:

- Occupational safety clothing
- Safety boots
- Safety helmet

WARNING

Risk of injury due to improper bracing!

The machine may topple or slip if it is braced improperly. This can cause severe injuries and significant material damage.

- Always perform any work as a pair, with the help of a second person.
- Make sure that the ground has sufficient load bearing capacity.
- Always use base plates.
- Observe the maximum permissible ground inclination.
- Make sure that the base plates are horizontal (maximum deviation ±8°).
- Do not anchor the outriggers using chains, ropes, pegs, etc.
- Always observe the movement of the outriggers when extending.
- Make sure that no people, supply lines or other objects are in the area around the outriggers.
- Extend the outriggers in the transport position carefully and with caution. There is a risk of collision with other parts of the machine!

The individual outriggers can each be latched in two work positions (narrow and wide). The setting is described in the following using outrigger 3 as an example.

WARNING

Risk of crushing

When unfastening the outrigger, there is a risk of crushing if an outrigger is allowed to pivot in an uncontrolled manner.

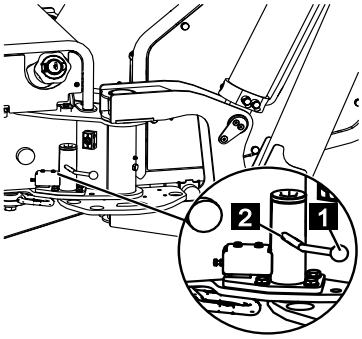

Fig. 124

1. Secure the outrigger with one hand.
2. Use your free hand to push the latching bolt on the handle bar (Fig.124/1) up along the link (Fig.124/2) until the outrigger can be pivoted freely.

Operation

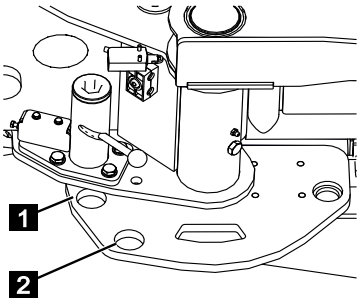

Fig. 125

3. Pivot the outrigger so that the latching bolt is positioned over the drilled hole for the narrow (Fig.125/1) or wide (Fig.125/2) work position.
4. Push the latching bolt on the handle bar down along the link. Make sure that the latching bolt is pushed in all the way.

7.9.2 Adjusting a bracing

Personnel:

- Trained persons

Protective equipment:

- Occupational safety clothing
- Safety boots
- Safety helmet

WARNING

Risk of injury due to improper bracing!

The machine may topple or slip if it is braced improperly. This can cause severe injuries and significant material damage.

- Always perform any work as a pair, with the help of a second person.
- Make sure that the ground has sufficient load bearing capacity.
- Always use base plates.
- Observe the maximum permissible ground inclination.
- Make sure that the base plates are horizontal (maximum deviation ±8°).
- Do not anchor the outriggers using chains, ropes, pegs, etc.
- Always observe the movement of the outriggers when extending.
- Make sure that no people, supply lines or other objects are in the area around the outriggers.
- Extend the outriggers in the transport position carefully and with caution. There is a risk of collision with other parts of the machine!

DANGER

Risk of crushing

Careless handling of the locking device carries with it a risk of crushing limbs.

- Never reach between the tooth systems of the locking device.
- Stand at a safe distance when pivoting the bracing.

WARNING

Risk of crushing

When unfastening the outrigger, there is a risk of crushing if an outrigger is allowed to pivot in an uncontrolled manner.

1. The individual outriggers can each be latched in two working positions (narrow and wide). The adjustment procedure is described in the following using outrigger 1 as an example. Secure the outrigger with one hand during the entire adjustment procedure.

Operation

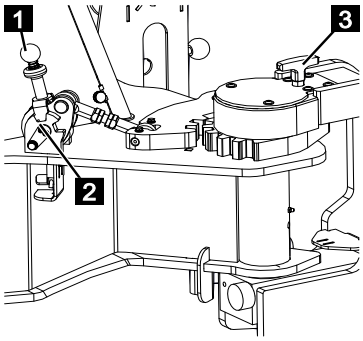

Fig. 126

2. Ensure that the locking lever (Fig.126/1) is positioned fully upright and the locking device is engaged in the upper-most position (Fig.126/2).
3. Pull the locking pin (Fig.126/3) upwards until the outrigger can be pivoted freely.
4. Pivot the outrigger until it is in the narrow or wide position.

NOTICE

Always ensure that the tooth systems are free of dirt. If necessary, clean the tooth systems.

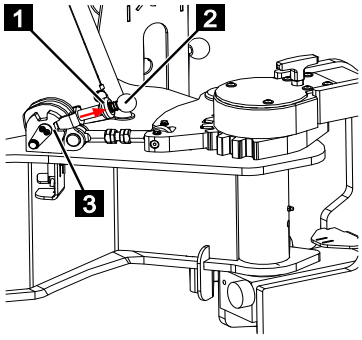

Fig. 127

5. Using your other hand, pull the locking device (Fig.127/1) upwards in the direction of the arrow and push the locking lever (Fig.127/2) down fully.
6. Let go of locking device (Fig.127/1).
7. Ensure that the locking lever (Fig.127/2) is all the way down and the locking device is engaged in the lowest position (Fig.127/3).

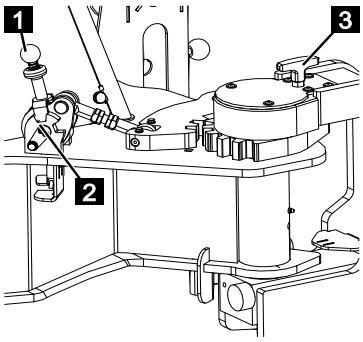

Fig. 128

8. If the outrigger is set to the transport position, you must ensure that the locking lever (Fig.128/1) is positioned fully upright and engaged in the upper-most position (Fig.128/2).
9. Ensure that the securing pin (Fig.128/3) is pushed in fully.

7.10 Operating the bracing

Personnel:

- Trained personnel

Protective equipment:

- Occupational safety clothing
- Safety shoes
- Safety helmet

WARNING

Risk of injury due to improper bracing!

The machine may topple or slip if it is braced improperly. This can cause severe injuries and significant material damage.

- Always perform any work as a pair, with the help of a second person.
- Make sure that the ground has sufficient load bearing capacity.
- Always use base plates.
- Observe the maximum permissible ground inclination.
- Make sure that the base plates are horizontal (maximum deviation ±8°).
- Do not anchor the outriggers using chains, ropes, pegs, etc.
- Always observe the movement of the outriggers when extending.
- Make sure that no people, supply lines or other objects are in the area around the outriggers.
- Extend the outriggers in the transport position carefully and with caution. There is a risk of collision with other parts of the machine!

In order to put the machine in work position, the outriggers can be extended manually or automatically. The machine can be braced either from below, using the lower controller, or from the working basket, using the control panel.

7.10.1 Manual bracing

1. Switch on the machine (↳Chapter 7.3 „Switching the machine on/off", on page 73).
2. Move the working basket into the work position (↳Chapter 7.8 „Moving the working basket into the work position (optional)", on page 98).
3. Move the outriggers into the desired work position (↳Chapter 7.9 „Moving the bracing into the work position", on page 101).

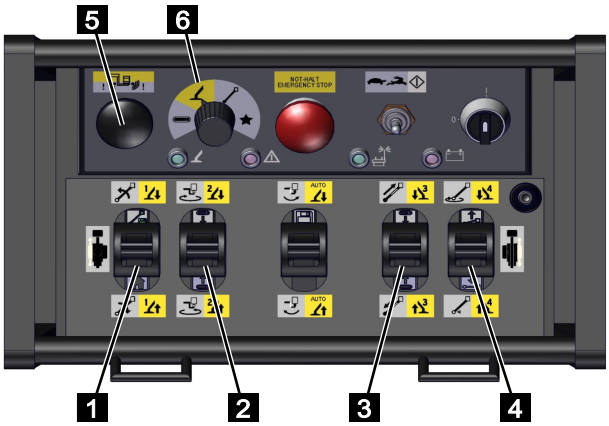

Fig. 129

4. Set the function selector to *[bracing function]* (yellow) (Fig.129/5).

WARNING

Risk of material damage due to improper use of the collision button!

When adjusting the outriggers manually, you need to keep the collision button pressed to enable movements. This can cause substantial damage to the machine!

– Make sure that no machine parts can be damaged during any movements.
– If there is a risk of collision, immediately release the collision button.

WARNING

Risk of injury from uneven lifting or lowering the machine!

Due to uneven lifting and lowering, the machine can tip or slide. This can cause severe injuries and significant material damage.

– If the machine begins to list during lifting or lowering, immediately stop the process and realign the machine manually.

5. Press and hold the collision button (Fig.129/5).
6. Use the control levers (Fig.129/1, 2, 3 and 4) to move the desired outrigger(s) as shown in the following table.

Operating element	Symbol	Effect
Control lever (Fig.129/1)		Outrigger 1 extends
		Outrigger 1 retracts
Control lever (Fig.129/2)		Outrigger 2 extends
		Outrigger 2 retracts
Control lever (Fig.129/3)		Outrigger 3 extends
		Outrigger 3 retracts
Control lever (Fig.129/4)		Outrigger 4 extends
		Outrigger 4 retracts

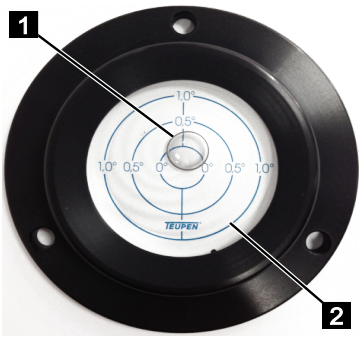

Fig. 130

7. Level out the chassis by aligning it with the circular level (Fig.130) using the outriggers. The bubble (Fig.130/1) in the circular level must be within the 1° circle (Fig.130/2).

Fig. 131

8. If the bracing is correct, the green lamp (Fig.131/1) lights up constantly.
9. Make sure that the crawler tracks do not touch the ground.

7.10.2 Automatic bracing

1. Switch on the machine (↳Chapter 7.3 „Switching the machine on/off", on page 73).
2. Move the basket boom and working basket into the work position (↳Chapter 7.8 „Moving the working basket into the work position (optional)", on page 98).
3. Move the outriggers into the desired work position (↳Chapter 7.9 „Moving the bracing into the work position", on page 101).

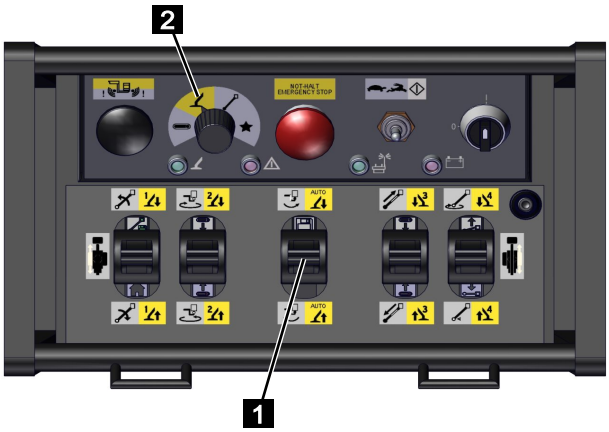

Fig. 132

4. Set the function selector on the radio control to *[bracing function]* (yellow) (Fig.132/2).

WARNING

Risk of injury from uneven lifting or lowering the machine!

Due to uneven lifting and lowering, the machine can tip or slide. This can cause severe injuries and significant material damage.

– If the machine begins to list during lifting or lowering, immediately stop the process and realign the machine manually.
– Have the automatic bracing checked by service staff.

5. Use the control lever (Fig.132/1) to operate the outriggers as per the following table.

Operating element	Symbol	Effect
Control lever (Fig.132/1)	AUTO	Outriggers 1, 2, 3 and 4 extend
	AUTO	Outriggers 1, 2, 3 and 4 retract

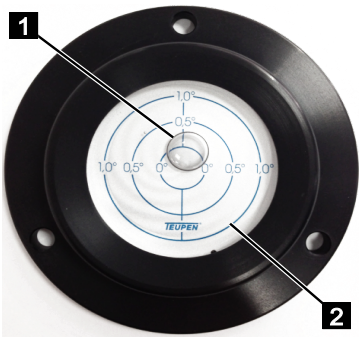

Fig. 133

6. Level out the chassis by aligning it with the circular level (Fig.133) using the outriggers. The bubble (Fig.133/1) in the circular level must be within the 1° circle (Fig.133/2).

Fig. 134

7. If the bracing is correct, the green lamp (Fig.134/1) on the radio control lights up constantly.
8. Make sure that the crawler tracks do not touch the ground.

7.11 Adjusting and operating the outriggers for bracing

Personnel:

- Trained persons

Protective equipment:

- Occupational safety clothing
- Safety boots
- Safety helmet

1. Switch on the machine (↳Chapter 7.3 „Switching the machine on/off", on page 73).
2. Move the working basket into the work position (↳Chapter 7.8 „Moving the working basket into the work position (optional)", on page 98).
3. Move the desired outrigger(s) into transport position, wide work position or narrow work position (↳Chapter 7.9 „Moving the bracing into the work position", on page 101).

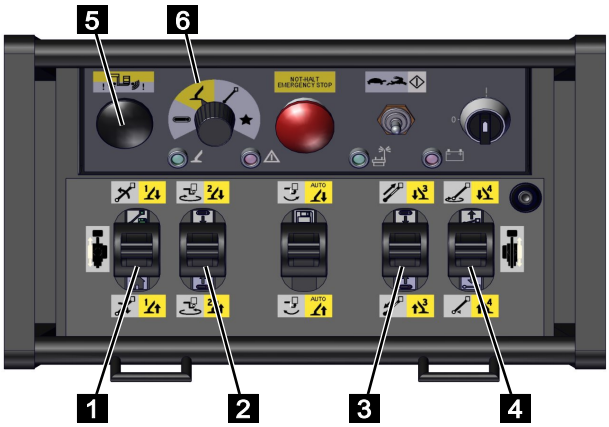

Fig. 135

4. Set the function selector to *[bracing function]* (yellow) (Fig.135/6).

WARNING

Risk of material damage due to improper use of the collision button!

When adjusting the outriggers manually, you need to keep the collision button pressed to enable movements. This can cause substantial damage to the machine!

– Make sure that no machine parts can be damaged during any movements.
– If there is a risk of collision, immediately release the collision button.

WARNING

Risk of injury from uneven lifting or lowering the machine!

Due to uneven lifting and lowering, the machine can tip or slide. This can cause severe injuries and significant material damage.

– If the machine begins to list during lifting or lowering, immediately stop the process and realign the machine manually.

5. Press and hold the collision button (Fig.135/5).
6. Use the control levers (Fig.135/1, 2, 3 and 4) to move the desired outrigger(s) as shown in the following table.

Operating element	Symbol	Effect
Push the control lever (Fig.135/1) forwards.		Outrigger 1 extends
		Outrigger 1 retracts
Push the control lever (Fig.135/2) forwards.		Outrigger 2 extends
		Outrigger 2 retracts
Push the control lever (Fig.135/3) forwards.		Outrigger 3 extends
		Outrigger 3 retracts
Push the control lever (Fig.135/4) forwards.		Outrigger 4 extends
		Outrigger 4 retracts

7.12 Crawler chassis, height- and width-adjustable

The height, and thus the width too, of the two crawler chassis can be adjusted independently. This function is required primarily when driving along slopes. The adjustment is executed mechanically or hydraulically (optional).

7.12.1 Hydraulic crawler adjustment

Personnel:

- Trained persons

Protective equipment:

- Occupational safety clothing
- Safety boots
- Safety helmet

WARNING

Risk of injury due to improper height/width adjustment!

The machine may topple or slip if height and width adjustments are made improperly. This can cause severe injuries and significant material damage.

– Observe the machine's maximum tilt angle.
– Always keep clear of the down slope side of the machine.
– Make sure that the area beside the machine is clear of people.

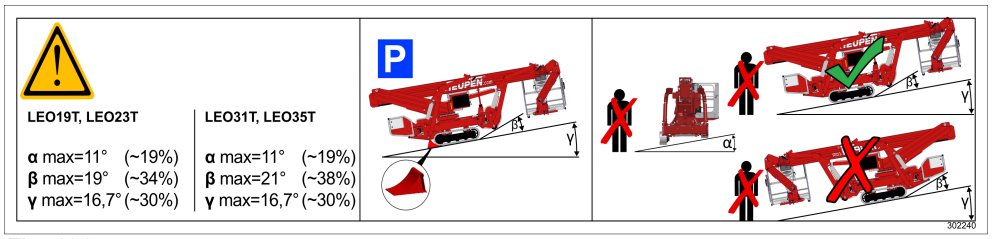

Fig. 136

7.12.1.1 Crawler chassis, extending and retracting hydraulically

1. Switch on the machine (↳Chapter 7.3 „Switching the machine on/off", on page 73).

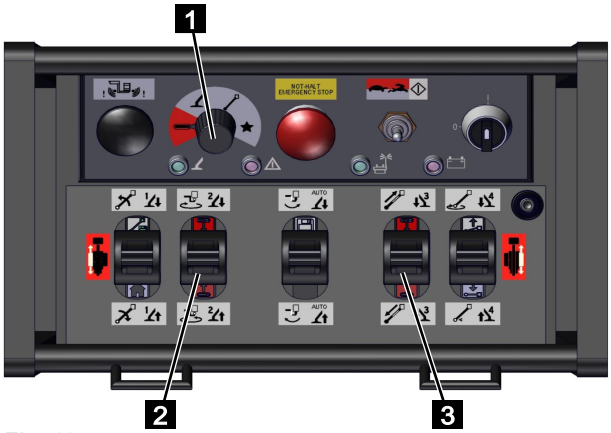

Fig. 137

2. Set the function selector on the radio control to *[crawler function]* (red) (Fig.137/3).
3. Use the control levers (Fig.137/1 and 2) to operate the crawler chassis as per the following table.

NOTICE

Make sure that there are no obstacles (kerbs etc.) beside the machine as they may obstruct the chassis movement.

Control levers	Symbol	
Control lever (Fig.137/1)		The left-hand crawler chassis is extended
		The left-hand crawler chassis is retracted
Control lever (Fig.137/2)		The right-hand crawler chassis is extended
		The right-hand crawler chassis is retracted

7.12.2 Tips and recommendations for adjusting the crawler chassis hydraulically

In the following you will find useful tips for adjusting the crawler chassis:

- The hydraulic adjustment mechanism is designed for adjusting the height and width of the chassis without having to raise the chassis with the outriggers.
- If the chassis cannot be adjusted because of unfavourable ground conditions, the bracing system will have to be used (↳Chapter 7.10 „Operating the bracing”, on page 106).
- The hydraulic adjustment power is limited in order to protect the machine and the crawler chassis. On a solid surface, such as pavement, asphalt, compressed gravel or firm turf, the crawler tracks can be moved up, down and sideways either on both sides at once or individually.
- On a sandy surface or soft grass, the crawler tracks may get stuck in the ground in a certain position, especially after extending and retracting several times.
- If the ground is not particularly hard, we recommend making the desired chassis adjustment beforehand on a solid surface or by using the bracing system (↳Chapter 7.10 „Operating the bracing”, on page 106) to raise the chassis in advance.

7.13 Operating the platform assembly

Personnel:

- Trained persons

Protective equipment:

- Occupational safety clothing
- Safety boots
- Safety helmet
- Safety harness

WARNING

Risk of injury due to improper operation!

Improper operation can cause severe injuries and significant material damage.

– Always wear a safety harness fastened to the attachment points when in the working basket (↳Chapter 5.2.4 „Working basket", on page 49).
– Do not swing or make sudden movements when in the working basket.
– Always perform any work with the help of at least a second person, with one person remaining on the ground at all times in order to be able to actuate the emergency control as necessary.
– Make sure that the ladder is folded up and locked.
– Do not climb onto the safety fence around the basket.
– Do not work on or near high-voltage lines.
– Beware of high obstacles.
– Make sure that when moving the working basket, no body parts are crushed, e.g. against a wall.
– At wind speeds above 12.5 m/s (Beaufort force 6 Bft), stop work immediately.

WARNING

Emergency operation inoperative!

If the machine's main battery voltage has dropped to < 11.2 V, battery capacity is insufficient for emergency operation.

– Before executing any platform functions, recharge the main battery (↳Chapter 7.26 „Charging the main battery", on page 172).
– Never begin platform operations without first checking the main battery's capacity. (Main battery voltage must be > 11.2 V!)
– Operation of the platform assembly at a main battery voltage of < 11.2 V is prohibited!

1. Check the main battery's capacity (↳Chapter 7.25 „Checking the main battery's capacity", on page 171).
2. Switch on the machine (↳Chapter 7.3 „Switching the machine on/off", on page 73).
3. Move the outriggers into the desired work position (↳Chapter 7.9 „Moving the bracing into the work position", on page 101).

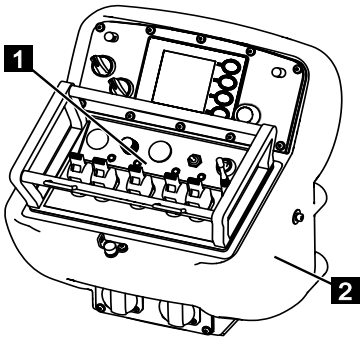

Fig. 138

4. Insert control (Fig.138/1) into the control panel (Fig.138/2).

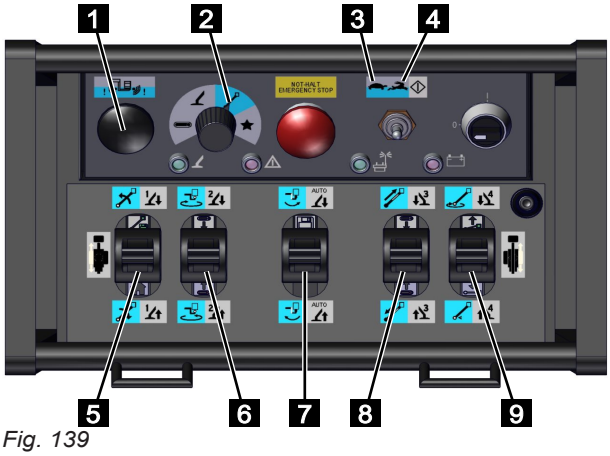

Fig. 139

5. Set the function selector on the control to *[platform function]* (blue) (Fig.139/2).
6. Use the mode selector on the control to select *[crawl speed]* (Fig.139/3) or *[fast speed]* (Fig.139/4).
7. In certain ranges, it will be necessary to press the collision button. To do so, you need to press and hold the collision (Fig.139/1) button while simultaneously using the desired control lever.

WARNING

Risk of material damage due to improper use of the collision button!

When operating the platform functions, certain ranges will require the collision button to be pressed. This can cause substantial damage to the machine!

– Make sure that no machine parts can be damaged during any movements.
– If there is a risk of collision, immediately release the collision button.

8. Use the control levers (Fig.139/5, 6, 7, 8 and 9) to operate the platform as per the following table.

Operating element	Symbol	Effect
Control lever (Fig.139/5)		Raises the telescopic boom
		Lowers the telescopic boom
Control lever (Fig.139/6)		The working basket pivots clockwise (viewed from above)
		The working basket pivots anti-clockwise (viewed from above)
Control lever (Fig.139/7)		Raises the basket boom
		Lowers the basket boom
Control lever (Fig.139/8)		Telescopes out the telescopic boom
		Telescopes in the telescopic boom
Control lever (Fig.139/9)		Pivots the platform clockwise (seen from above)
		Pivots the platform anti-clockwise (seen from above)

Operation

7.14 Memory function

Personnel:

- Trained persons

Protective equipment:

- Occupational safety clothing
- Safety boots
- Safety helmet
- Safety harness

You can use the memory function to store the working basket position and later move back there directly.

WARNING

Damage through improper operation!

The control will move the working basket directly to the stored position (along the shortest path). If the path is obstructed, this can cause substantial damage to the machine.

– If there is a risk of collision, immediately release control lever and move the working basket to the desired position manually.

7.14.1 Storing the working basket position

1. Use the platform functions to move the working basket to a position within the work diagram range (↳Chapter 7.13 „Operating the platform assembly", on page 116).

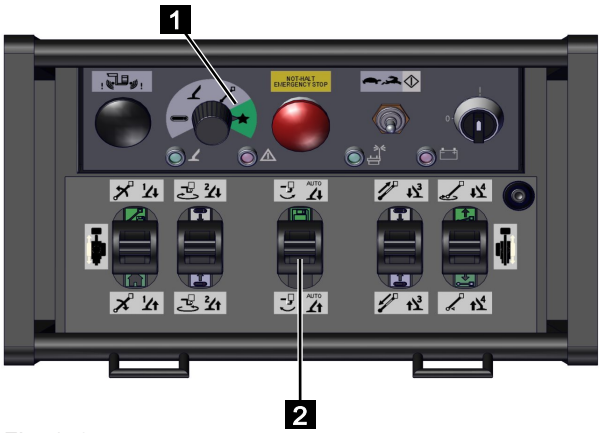

Fig. 140

2. Set the function selector (Fig.140/1) to *[special function]* (green).
3. Use the control lever (Fig.140/2) as per the following table.

Operating element	Symbol	Effect
Control lever (Fig.140/2)		The working basket position has been stored when the display shows the symbol.

NOTICE

The controls always memorise the last stored work diagram position. There is no way to delete the stored position. A previously stored position can only be overwritten by storing a new position.

7.14.2 Moving the working basket into a stored position

1. Switch on the machine (↳Chapter 7.3 „Switching the machine on/off", on page 73).

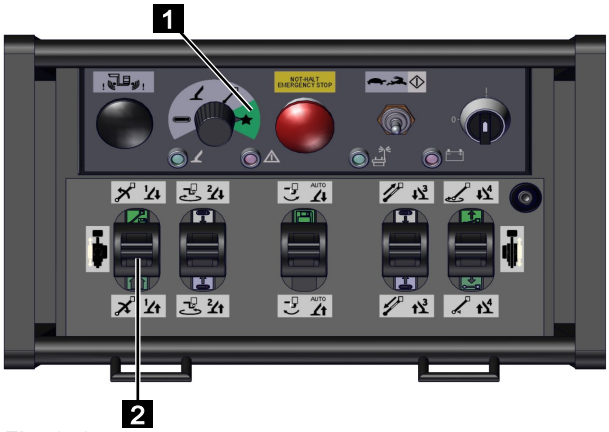

Fig. 141

2. Set the function selector (Fig.141/1) to *[special function]* (green).
3. Use the control lever (Fig.141/2) as per the following table.

WARNING

Damage through improper operation!

The control will move the working basket directly to the stored position (along the shortest path). If the path is obstructed, this can cause substantial damage to the machine.

– If there is a risk of collision, immediately release control lever and move the working basket to the desired position manually.

Operating element	Symbol	Effect
Control lever (Fig.141/2)		The platform assembly moves the working basket into the position stored earlier.

7.15 Moving the platform assembly into transport position

Personnel:

- Trained persons

Protective equipment:

- Occupational safety clothing
- Safety boots
- Safety helmet
- Safety harness

Definition of transport position

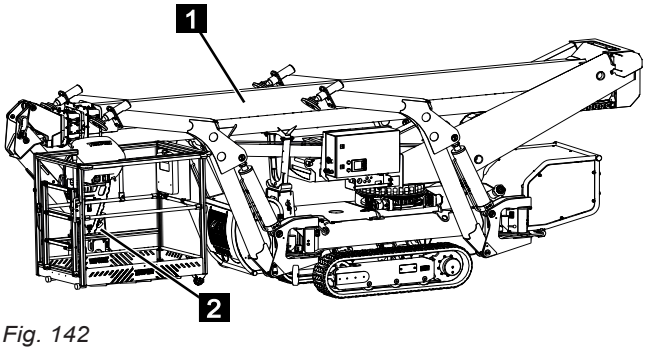

Fig. 142

- The telescopic boom (Fig.142/1) is on the transport support.
- The working basket (Fig.142/2) is in transport position.

7.15.1 Moving the platform assembly into transport position manually

1. Switch on the machine (↳Chapter 7.3 „Switching the machine on/off", on page 73).
2. Telescope in the telescopic boom (↳Chapter 7.13 „Operating the platform assembly", on page 116).
3. Lower the telescopic boom until it stops automatically (↳Chapter 7.13 „Operating the platform assembly", on page 116).
4. Pivot the platform towards the transport position (↳Chapter 7.13 „Operating the platform assembly", on page 116).
   – The display shows (Fig.143.

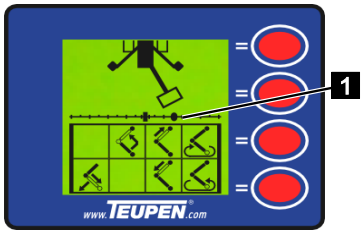

Fig. 143

5. Continue pivoting the platform towards the transport position until the movement stops automatically and the display screen shows the tick (Fig.144/1).
6. Lower the basket boom until the movement stops (↳Chapter 7.13 „Operating the platform assembly", on page 116). (Only machines with movable basket boom.)

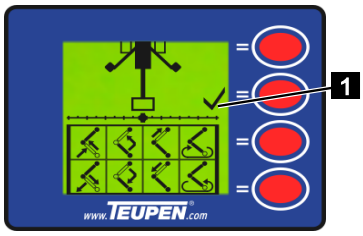

Fig. 144

7. Rotate the working basket towards the work position until it stops rotating and the display screen shows the tick (↳Chapter 7.8 „Moving the working basket into the work position (optional)", on page 98)/1).

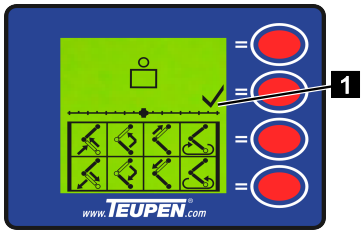

Fig. 145

7.15.2 Moving the platform assembly to the transport position using the home function

WARNING

Damage through improper operation!

The control will move directly to the transport position (along the shortest path). If the path is obstructed, this can cause substantial damage to the machine.

– If there is a risk of collision, immediately release control lever and move the working basket to the desired position manually.

1. Switch on the machine (↳Chapter 7.3 „Switching the machine on/off", on page 73).

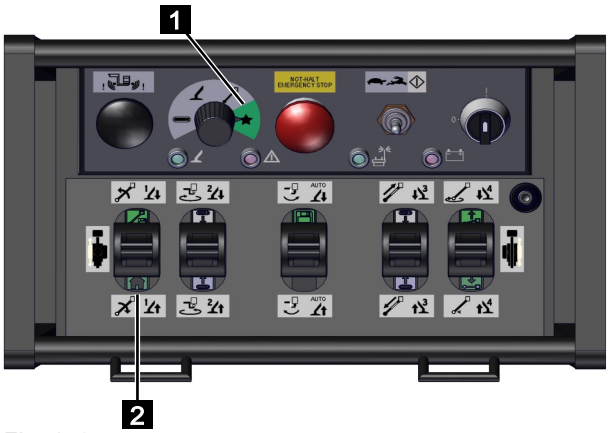

Fig. 146

2. Set the function selector (Fig.146/1) to *[special function]* (green).
3. Pull the control lever (Fig.146/2) back and hold it there until the platform assembly has reached the transport position.

7.16 Moving the bracing into the transport position

Personnel:

- Trained persons

Protective equipment:

- Occupational safety clothing
- Safety boots
- Safety helmet
- Safety harness

Definition of transport position

Transport position 1

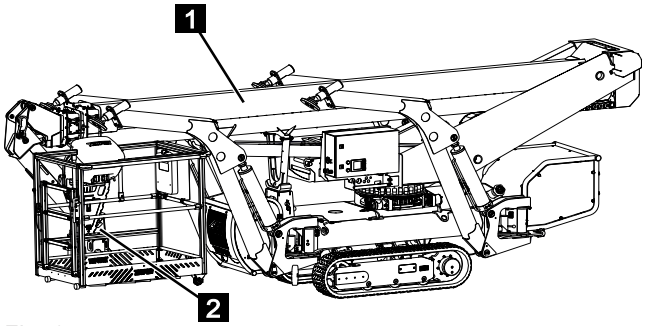

Fig. 147

- Outriggers 1 and 4 (Fig.147/1) are in transport position 1.
- Outriggers 2 and 3 (Fig.147/2) are in transport position 1.

Transport position 2

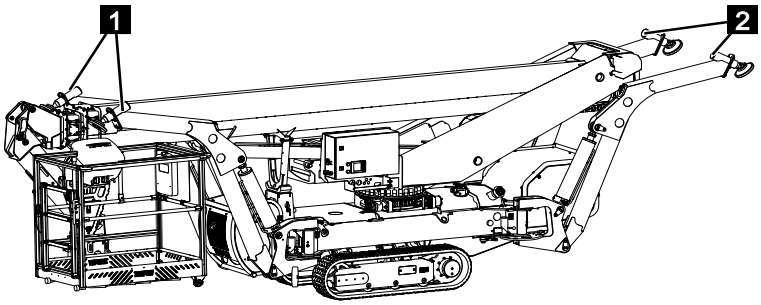

Fig. 148

- Outriggers 1 and 4 (Fig.148/1) are in transport position 1.
- Outriggers 2 and 3 (Fig.148/1) are in transport position 2.

7.16.1 Moving the bracing into transport position manually

1. Switch on the machine (↳Chapter 7.3 „Switching the machine on/off", on page 73).
2. Move the platform assembly into transport position (↳Chapter 7.15 „Moving the platform assembly into transport position", on page 123).

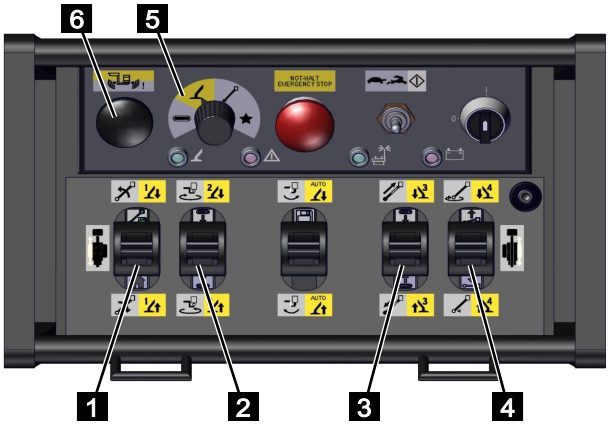

Fig. 149

3. Set the function selector to *[bracing function]* (yellow) (Fig.149/5).

WARNING

Risk of material damage due to improper use of the collision button!

When adjusting the outriggers manually, you need to keep the collision button pressed to enable movements. This can cause substantial damage to the machine!

– Make sure that no machine parts can be damaged during any movements.
– If there is a risk of collision, immediately release the collision button.

4. Press and hold the collision button (Fig.149/6).
5. Use the control levers (Fig.149/1, 2, 3 and 4) to move the desired outrigger(s) as shown in the following table.

WARNING

Risk of injury from uneven lifting or lowering the machine!

Due to uneven lifting and lowering, the machine can tip or slide. This can cause severe injuries and significant material damage.

– If the machine begins to list during lifting or lowering, immediately stop the process and realign the machine manually.

Operating element	Symbol	Effect
Control lever (Fig.149/1)		Outrigger 1 extends
		Outrigger 1 retracts
Control lever (Fig.149/2)		Outrigger 2 extends
		Outrigger 2 retracts
Control lever (Fig.149/3)		Outrigger 3 extends
		Outrigger 3 retracts
Control lever (Fig.149/4)		Outrigger 4 extends
		Outrigger 4 retracts

6. Move the bracing into the desired transport position.

7.16.2 Moving the bracing into the transport position automatically

1. Switch on the machine (↳Chapter 7.3 „Switching the machine on/off", on page 73).
2. Move the platform assembly into transport position (↳Chapter 7.15 „Moving the platform assembly into transport position", on page 123).

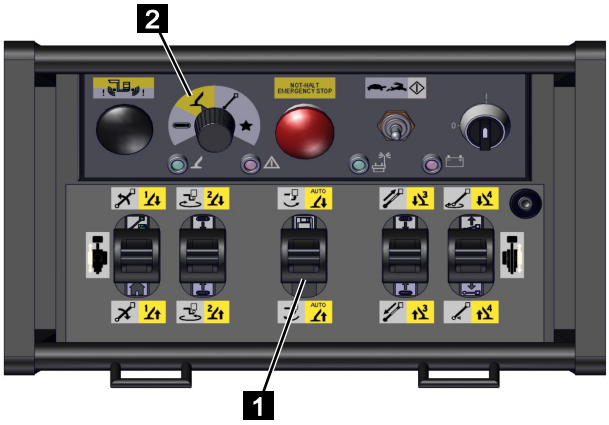

Fig. 150

3. Set the function selector to *[bracing function]* (yellow) (Fig.150/2).
4. Use the control levers (Fig.150/1) to move the outriggers as shown in the following table.

WARNING

Risk of injury from uneven lifting or lowering the machine!

Due to uneven lifting and lowering, the machine can tip or slide. This can cause severe injuries and significant material damage.

– If the machine begins to list during lifting or lowering, immediately stop the process and realign the machine manually.
– Have the automatic bracing checked by service staff.

Operating element	Symbol	Effect
Control lever (Fig.150/1)	AUTO	Outriggers 1, 2, 3 and 4 extend
	AUTO	Outriggers 1, 2, 3 and 4 retract

5. Move the bracing into the desired transport position.

7.16.3 Moving the bracing to the transport position using the home function

You can use the home function to move the platform assembly to the transport position.

1. Switch on the machine (↳Chapter 7.3 „Switching the machine on/off", on page 73).
2. Move the platform assembly into transport position (↳Chapter 7.15 „Moving the platform assembly into transport position", on page 123).

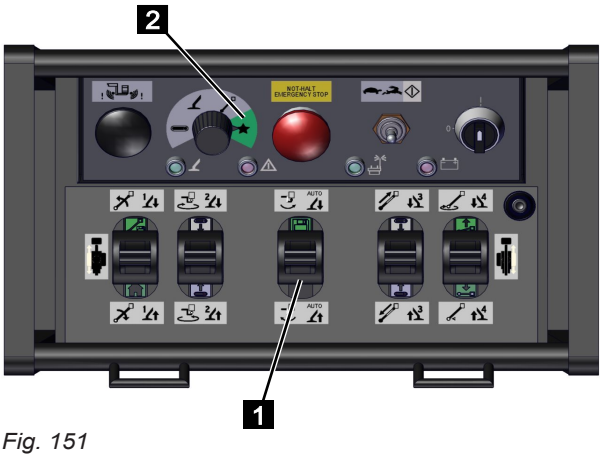

Fig. 151

3. Set the function selector on the radio control to *[special function]* (green) (Fig.151/2).

WARNING

Risk of injury from uneven lifting or lowering the machine!

If the machine is lowered unevenly, it may topple or slip. This can cause severe injuries and significant material damage.

– If the machine begins to list during lowering, immediately stop the process and lower the machine manually.

4. Pull the control lever (Fig.151/1) back and hold it there until the outriggers have retracted.

7.17 Removing/mounting the working basket

Personnel:

- Trained persons

Protective equipment:

- Occupational safety clothing
- Safety boots
- Safety helmet

When traversing narrow passages or when mounting a lifting device, the working basket needs to be removed and mounted again. The linkage platform features a changing mechanism for this purpose.

NOTICE

Always engage a second person to help change the working basket.

7.17.1 Removing the working basket

1. The working basket must be in transport position (↳Chapter 7.15 „Moving the platform assembly into transport position", on page 123) or work position (↳Chapter 7.8 „Moving the working basket into the work position (optional)", on page 98).
2. 2nd person: Support the working basket from below (Fig.152/1).

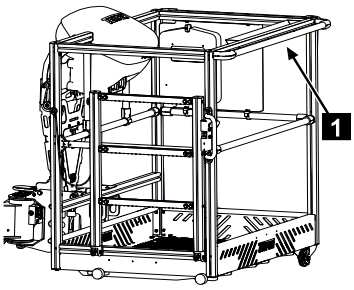

Fig. 152

3. Pull the cotter pin (Fig.153/1) out of the basket locking pin.

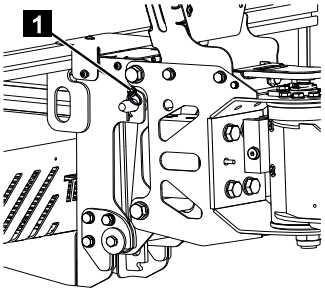

Fig. 153

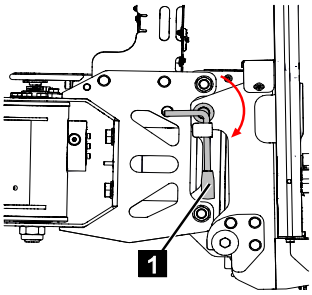

Fig. 154

4. Turn the basket locking pin (Fig.154/1) clockwise through 90°.

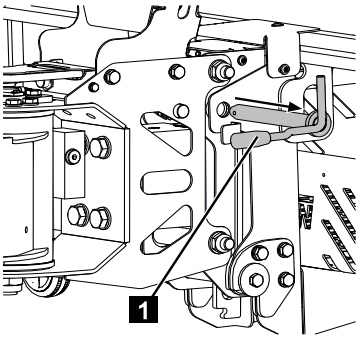

Fig. 155

5. Pull out the basket locking pin (Fig.155/1).

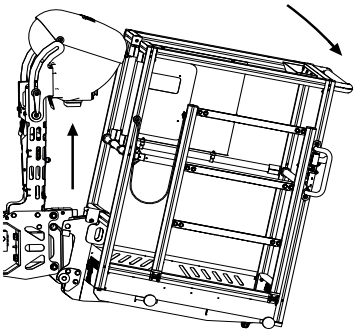

Fig. 156

6. Together with a second person, lift the working basket slightly, tilt it forwards and pull it out of the holder.

7.17.2 Installing the working basket

1. The working basket must be in transport position (↳Chapter 7.15 „Moving the platform assembly into transport position", on page 123) or work position (↳Chapter 7.8 „Moving the working basket into the work position (optional)", on page 98).

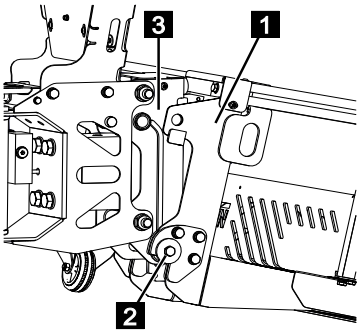

Fig. 157

2. Working as a pair, insert the working basket (Fig.157/1) into the holder (Fig.157/2) and push it into the working basket mount (Fig.157/3).

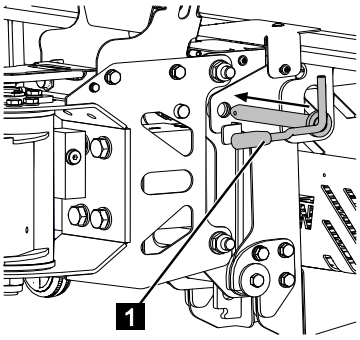

Fig. 158

3. Insert the locking pin (Fig.158/1).

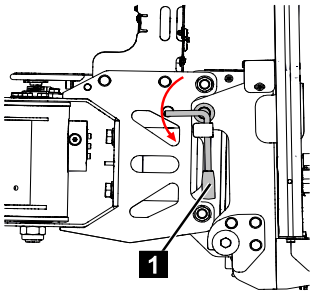

Fig. 159

4. Turn the locking pin (Fig.159/1) 90° anti-clockwise until it engages.

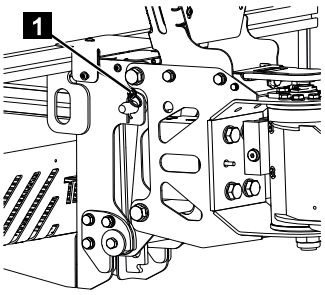

Fig. 160

5. Insert the spring cotter pin (Fig.160/1) into the locking pin.

7.18 Lifting device

The lifting device can lift loads of up to 300 kg.

WARNING

Lethal danger from suspended loads!

When lifting loads there is a risk of fatal injury from falling parts or parts swinging out of control.

- Never stand underneath suspended loads.
- Only fasten loads to the designated fastening point for lifting loads. Make sure that the fastening equipment is firmly secured.

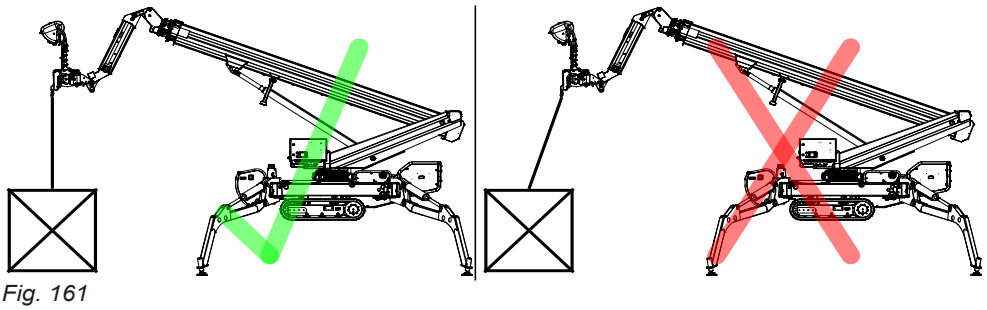

Fig. 161

Always lift loads straight and directly upwards. Never lift a load at an angle. Only use suitable lifting accessories.

7.18.1 Mounting/removing the lifting device

Personnel:

- Trained persons

Protective equipment:

- Occupational safety clothing
- Safety boots
- Safety helmet

1. Remove the working basket (↳Chapter 7.17 „Removing/mounting the working basket", on page 131).

Installation

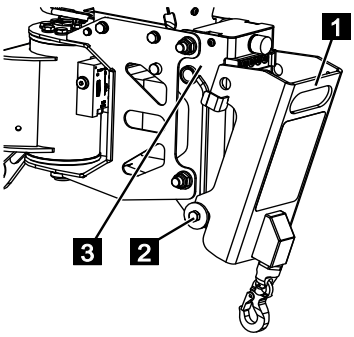

Fig. 162

2. Insert the lifting device (Fig.162/1) into the holder (Fig.162/2) and push it into the mount (Fig.162/3).

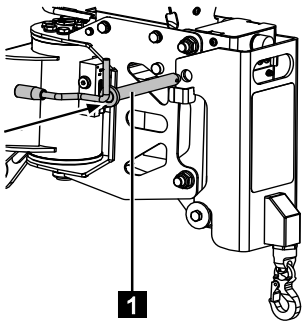

Fig. 163

3. Insert the locking pin (Fig.163/1).

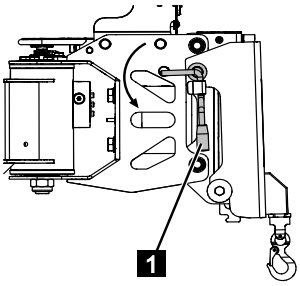

Fig. 164

4. Turn the locking pin (Fig.164/1) 90° anti-clockwise until it engages.

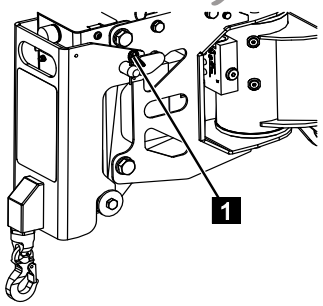

Fig. 165

5. Insert the spring cotter pin /1) into the locking pin.

Removal

6. Removal is performed by repeating the steps in reverse order.

7.18.2 Operating the lifting device

Personnel:

- Trained persons

Protective equipment:

- Occupational safety clothing
- Safety boots
- Safety helmet

WARNING

Emergency operation inoperative!

If the machine's main battery voltage has dropped to < 11.2 V, battery capacity is insufficient for emergency operation.

– Before executing any platform functions, recharge the main battery (↳Chapter 7.26 „Charging the main battery", on page 172).
– Never begin platform operations without first checking the main battery's capacity. (Main battery voltage must be > 11.2 V!)
– Operation of the platform assembly at a main battery voltage of < 11.2 V is prohibited!

1. Check the main battery's capacity (↳Chapter 7.25 „Checking the main battery's capacity", on page 171).
2. Check the main battery's capacity (↳Chapter 7.25 „Checking the main battery's capacity", on page 171).
3. Switch on the machine (↳Chapter 7.3 „Switching the machine on/off", on page 73).
4. Brace the machine (↳Chapter 7.10 „Operating the bracing", on page 106).

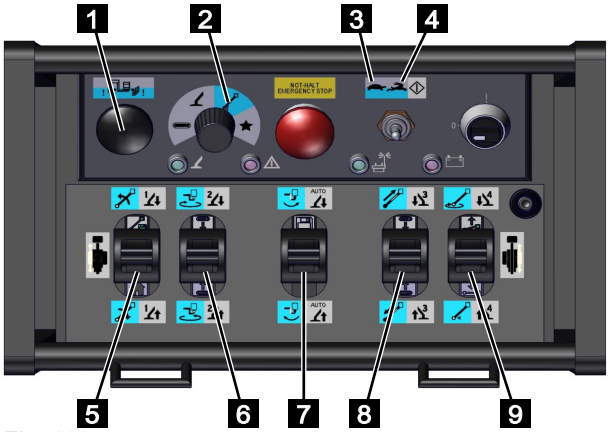

Fig. 166

5. Set the function selector on the radio control to *[platform function]* (blue) (Fig.166/2).
6. Use the mode selector on the radio control to select *[crawl speed]* (Fig.166/3) or *[fast speed]* (Fig.166/4).

7. In certain ranges, it will be necessary to press the collision button. To do so, you need to press and hold the collision (Fig.166/1) button while simultaneously using the desired control lever.

WARNING

Risk of material damage due to improper use of the collision button!

When operating the platform functions, certain ranges will require the collision button to be pressed. This can cause substantial damage to the machine!

– Make sure that no machine parts can be damaged during any movements.
– If there is a risk of collision, immediately release the collision button.

8. Use the control levers (Fig.166/5, 6, 7, 8 and 9) to operate the platform as per the following table.

Operating element	Symbol	Effect
Control lever (Fig.166/5)		Raises the telescopic boom
		Lowers the telescopic boom
Control lever (Fig.166/6)		The working basket pivots clockwise (viewed from above)
		The working basket pivots anti-clockwise (viewed from above)
Control lever (Fig.166/7)		Raises the basket boom
		Lowers the basket boom
Control lever (Fig.166/8)		Telescopes out the telescopic boom
		Telescopes in the telescopic boom
Control lever (Fig.166/9)		Pivots the platform clockwise (seen from above)
		Pivots the platform anti-clockwise (seen from above)

7.19 Filling the fuel tank

Personnel:

- Trained persons

Protective equipment:

- Occupational safety clothing
- Safety boots

WARNING

Fire hazard due to improper refuelling!

A fire hazard exists when refuelling due to leaking fumes and spilled fuel.

– Do not smoke while refuelling and ensure that no fire or naked light is near.
– Wear suitable gloves when refuelling.
– Shut off engine prior to refuelling.
– Only refuel in well-ventilated areas or outside, since escaping vapours can be inhaled.
– Never fill the fuel tank higher than the mark.
– Wipe up all spilled fuel prior to starting the combustion engine or take up using suitable binders and dispose of properly.

1. Make sure that the combustion engine is switched off (↳Chapter 7.3 „Switching the machine on/off", on page 73).
2. Make sure that the aerial lift platform is in a horizontal position.
3. Wear suitable gloves (diesel gloves, disposable gloves etc.).
4. Unlock the fuel cap (Fig.167/1), unscrew it and place it aside in a clean space.

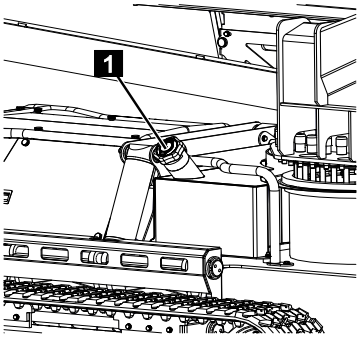

Fig. 167

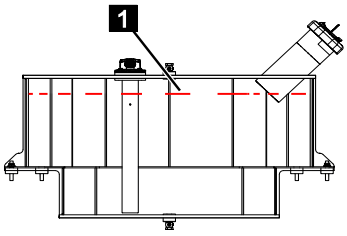

Fig. 168

5. Fill the fuel tank without exceeding the indicated maximum filling level (Fig.168/1).
6. Screw the fuel cap back on.
7. Wipe up any spilled fuel before starting up the combustion engine.

7.20 Emergency operation

Personnel:

- Trained persons

Protective equipment:

- Occupational safety clothing
- Safety boots
- Safety helmet

WARNING

Risk of injury due to missing safety equipment!

In emergency mode, all the safety devices (e.g. limit switches, emergency stop) are disabled.

– Execute emergency operation according to the following instructions.

The aerial lift platform has an electric emergency operation mode which allows you to operate it without the radio control, cable remote control or control panel.

7.20.1 Platform assembly in emergency mode

Fig. 169

1. Turn the ignition switch (Fig.169/1) clockwise to position *[1]*.

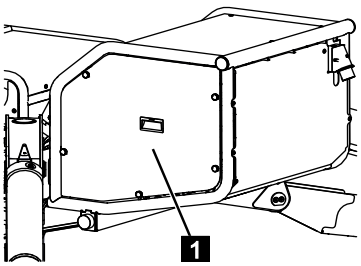

Fig. 170

2. Unscrew and remove the cover (Fig.170/1).

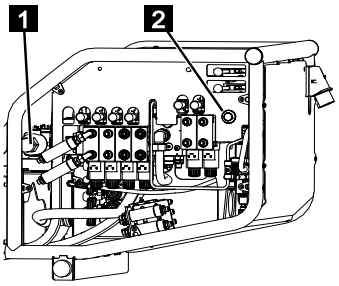

Fig. 171

3. Push in the [platform] valve (Fig.171/1) and lock it by turning it clockwise.

WARNING

Risk of injury due to improper operation!

The machine may topple or slip if platform operation is performed improperly. This can cause severe injuries and material damage.

- If there are people or objects in the working basket, keep it as horizontal as possible.
- Always fully retract the telescopic boom first.
- Swivel the platform into transport position.
- Always swing it back to the same side.
- Pivot the working basket onto the side.
- Lower the telescopic boom into the transport position.

4. Press and hold the button *[emergency mode]* (Fig.171/2).
5. Operate the platform valves as per the table below.

NOTICE

You can operate more than one valve at once.

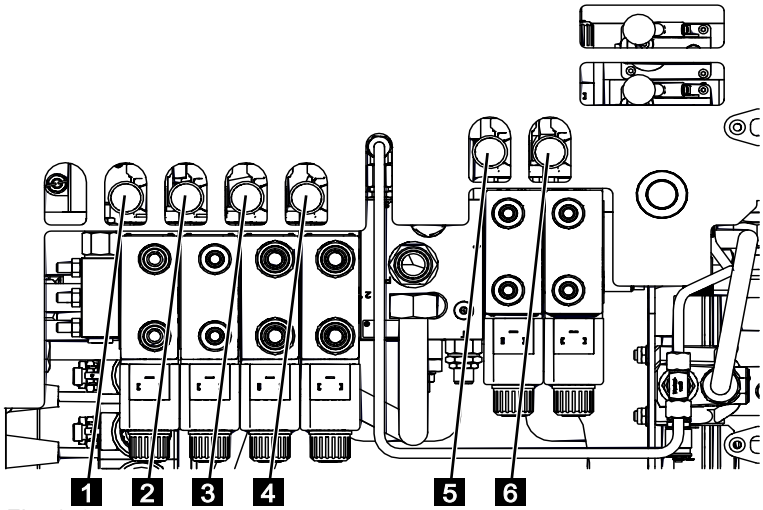

Fig. 172

Operating element	Symbol	Effect
Valve lever (Fig.172/1)		The working basket pivots clockwise (viewed from above)
		The working basket pivots anti-clockwise (viewed from above)
Valve lever (Fig.172/2)		Raises the basket boom
		Lowers the basket boom
Valve lever (Fig.172/3)		Raises the telescopic boom
		Lowers the telescopic boom
Valve lever (Fig.172/4)		Telescopes out the telescopic boom
		Telescopes in the telescopic boom
Valve lever (Fig.172/5)		Pivots the platform clockwise (seen from above)
		Pivots the platform anti-clockwise (seen from above)
Valve lever (Fig.172/6)		Tilt the working basket to the rear
		Tilt working basket to the front

Information about the transport position

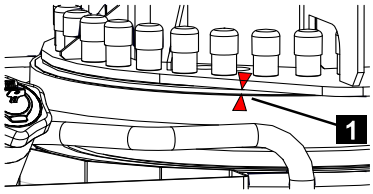

Fig. 173

6. Swivel the platform in the direction of the transport position so that both arrows (Fig.173/1) on the rotation indicator are aligned with each other.
7. After emergency operation, unlock the valve (Fig.174/1) by turning it anti-clockwise and screw the cover back into place.

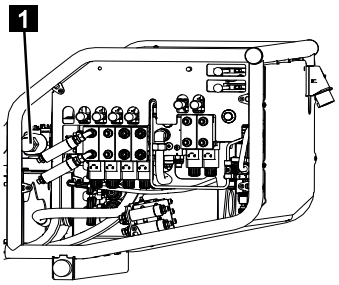

Fig. 174

WARNING

Risk of injury due to uncontrolled movements!

If the valves are set incorrectly in normal mode, there is a risk of uncontrolled movements. This can cause severe injuries.

– Ensure that all valves are turned into their original position.

7.20.2 Bracing in emergency mode

Fig. 175

1. Turn the ignition switch (Fig.175/1) clockwise to position *[1]*.

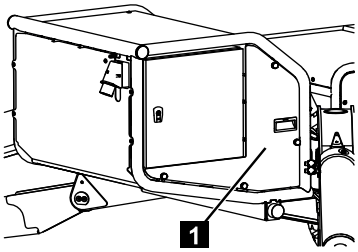

Fig. 176

2. Unscrew the cover (Fig.176/1).

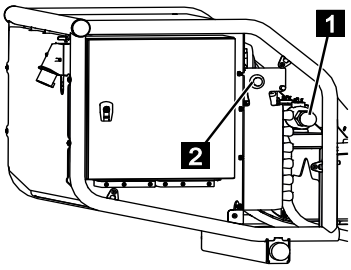

Fig. 177

3. Push in the valve (Fig.177/1) and lock it by turning it clockwise.

WARNING

Risk of injury due to improper operation!

The machine may topple or slip if outrigger mode is operated improperly. This can cause severe injuries and material damage.

– Keep the machine in a position as close to horizontal as possible when lowering.

4. Press and hold the button *[emergency mode]* (Fig.177/2).
5. Operate the valves as per the table below.

NOTICE

You can operate more than one valve at once.

Operation

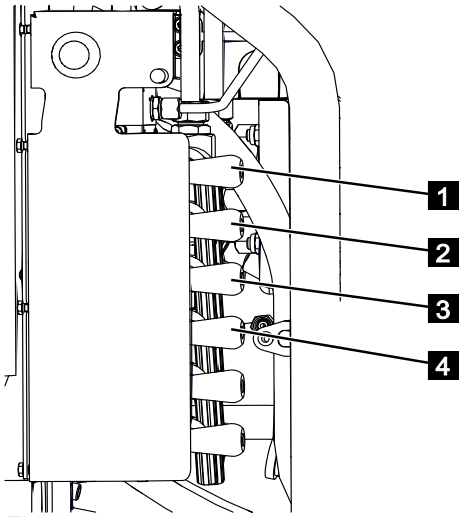

Fig. 178

Operating element	Symbol	Effect
Push the valve lever (Fig.178/1) forwards.		Outrigger 1 extends
Pull the valve lever (Fig.178/1) back.		Outrigger 1 retracts
Push the valve lever (Fig.178/2) forwards.		Outrigger 2 extends
Pull the valve lever (Fig.178/2) back.		Outrigger 2 retracts
Push the valve lever (Fig.178/3) forwards.		Outrigger 3 extends
Pull the valve lever (Fig.178/3) back.		Outrigger 3 retracts
Push the valve lever (Fig.178/4) forwards.		Outrigger 4 extends
Pull the valve lever (Fig.178/4) back.		Outrigger 4 retracts

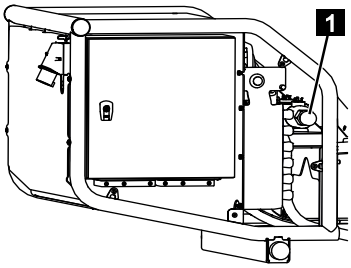

Fig. 179

6. After emergency operation, unlock the valve (Fig.179/1) by turning it anti-clockwise and screw the cover back into place.

WARNING

Risk of injury due to uncontrolled movements!

If the valves are set incorrectly in normal mode, there is a risk of uncontrolled movements. This can cause severe injuries.

– Ensure that all valves are turned into their original position.

7.20.3 Crawler chassis in emergency mode

7.20.3.1 Raising/lowering the crawler chassis

Fig. 180

1. Turn the ignition switch (Fig.180/1) clockwise to position *[1]*.

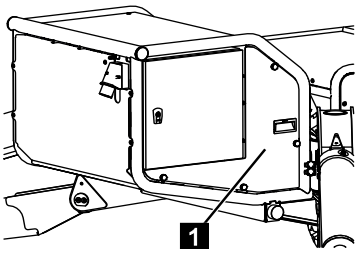

Fig. 181

2. Unscrew the cover (Fig.181/1).

WARNING

Risk of injury due to improper operation!

The machine may topple or slip if the crawler chassis is operated improperly. This can cause severe injuries and material damage.

- Keep the machine as horizontal as possible.
- Observe the machine's maximum tilt angle.
- Always keep clear of the down slope side of the machine.

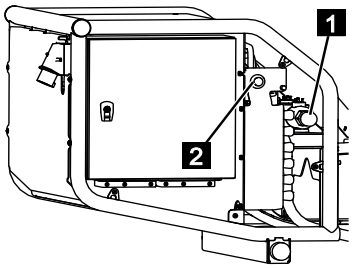

Fig. 182

3. Push in the valve (Fig.182/1) and lock it by turning it clockwise.
4. Press and hold the button *[emergency mode]* (Fig.182/2).

5. Operate the valves as per the table below.

NOTICE

You can operate more than one valve at once.

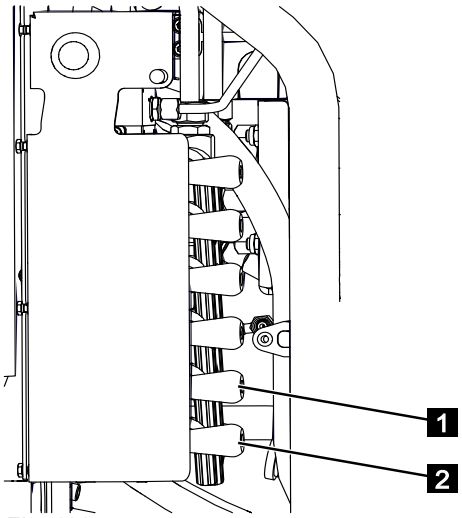

Fig. 183

Operating element	Symbol	Effect
Push the valve lever (Fig.183/1) forwards.		Lowers the left-hand crawler chassis
Pull the valve lever (Fig.183/1) back.		Raises the left-hand crawler chassis
Push the valve lever (Fig.183/2) forwards.		Lowers the right-hand crawler chassis
Pull the valve lever (Fig.183/2) back.		Raises the right-hand crawler chassis

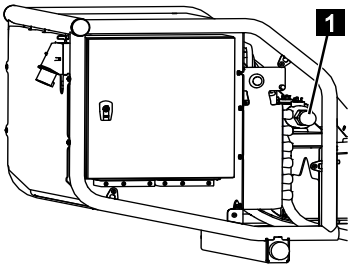

Fig. 184

6. After emergency operation, unlock the valve (Fig.184/1) by turning it anti-clockwise and screw the cover back into place.

WARNING

Risk of injury due to uncontrolled movements!

If the valves are set incorrectly in normal mode, there is a risk of uncontrolled movements. This can cause severe injuries.

– Ensure that all valves are turned into their original position.

7.20.3.2 Driving the crawler chassis

Fig. 185

1. Turn the ignition switch (Fig.185/1) clockwise to position *[1]*.

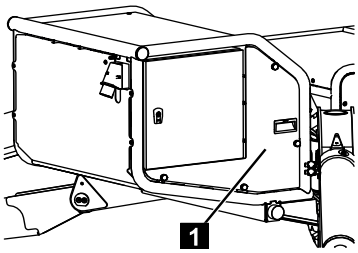

Fig. 186

2. Unscrew the cover (Fig.186/1).

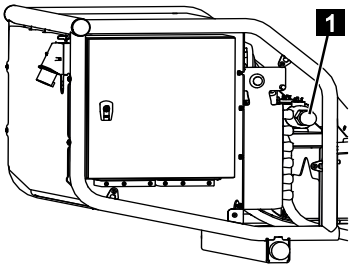

Fig. 187

3. Push in the valve (Fig.187/1) and lock it by turning it clockwise.

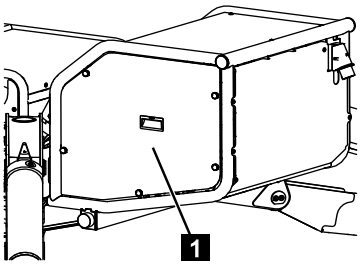

Fig. 188

4. Unscrew the cover (Fig.188/1).

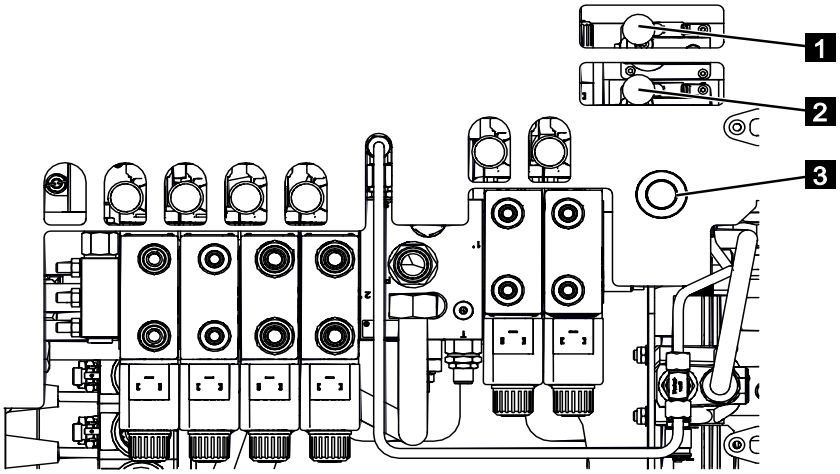

Fig. 189

WARNING

Risk of injury due to improper operation!

The machine may topple or slip if the crawler chassis is operated improperly. This can cause severe injuries and material damage.

- Keep the machine as horizontal as possible.
- Observe the machine's maximum tilt angle.
- Always keep clear of the down slope side of the machine.

5. Press and hold the button *[emergency mode]* (Fig.189/3).
6. Operate the valves as per the table below.

Operating element	Symbol	Effect
Push the valve lever (Fig.189/1) forwards.		Moves the right-hand crawler chassis forwards
Pull the valve lever (Fig.189/1) back.		Moves the right-hand crawler chassis backwards
Push the valve lever (Fig.189/2) forwards.		Moves the left-hand crawler chassis forwards
Pull the valve lever (Fig.189/2) back.		Moves the left-hand crawler chassis backwards

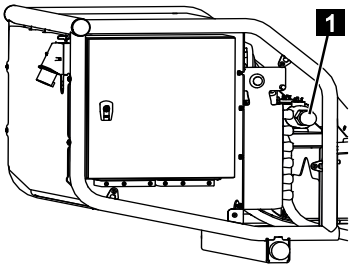

Fig. 190

7. After emergency operation, unlock the valve (Fig.190/1) by turning it anti-clockwise and screw the covers back into place on both sides.

WARNING

Risk of injury due to uncontrolled movements!

If the valves are set incorrectly in normal mode, there is a risk of uncontrolled movements. This can cause severe injuries.

– Ensure that all valves are turned into their original position.

7.21 Service mode

Personnel:

- Trained persons

Protective equipment:

- Occupational safety clothing
- Safety boots
- Safety helmet

Definition of service mode

Operation of aerial lift platform without safety functions using only the hydraulics without control system support. Fully hydraulic operation with power supplied by the combustion engine. In service mode, the controls are disabled.

Execution of service mode is only permitted if the aerial lift platform is in technically impeccable condition.

Service mode may be necessary or useful, for example during maintenance work. Service mode divides into platform, outrigger and crawler functions.

WARNING

Risk of injury due to missing safety equipment!

Improper machine movements can cause the machine to topple over. This can cause serious or even fatal injuries. In service mode, all safety equipment except for the emergency stop function on the main control box are disabled!

- Execute service mode according to the following instructions.
- The working basket must be clear of people when executing service mode.
- Execution of crane functions using service mode is prohibited.
- Never fully extend the profile package without using aids. See also (↳Chapter 8.2.7 „Lubricating the boom sections and ropes”, on page 193).

NOTICE

Service mode is not emergency mode! Emergency operation is performed using the electric back-up pump only.

7.21.1 Switching the machine on/off for service mode

7.21.1.1 Switching the machine on/off for service mode using the combustion engine

NOTICE

Using the engine controller's key switch to switch the combustion engine on/off is reserved exclusively for service mode.

Starting the combustion engine

The engine controller for the diesel engine has an automatic preheating unit. When cold the combustion engine is preheated before it is started up. Diesel engines at operating temperature and petrol engines are not preheated.

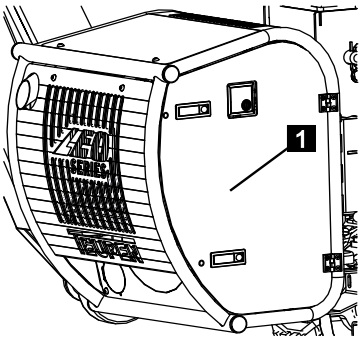

Fig. 191

1. Open the cover (Fig.191/1).

Fig. 192

2. Turn the key (Fig.192/1) clockwise into the horizontal position as shown.
3. Wait until the preheating time has elapsed.

Fig. 193

4. Turn the key (Fig.193/1) clockwise and hold it in the position as shown until the engine starts up.

NOTICE

The engine is secured mechanically to prevent it from starting up again immediately. It cannot be restarted again until the ignition key is turned back to the initial position.

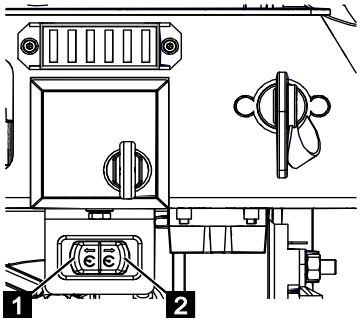

Fig. 194

5. Press the service button (Fig.194/1 or 2) to increase the combustion engine's speed.

Stopping the combustion engine

Fig. 195

6. Turn the key (Fig.195/1) anti-clockwise into the initial position as shown and remove the key.

7.21.1.2 Switching the machine on/off for service mode using the mains connection

1. Connect the machine to the mains supply (↳Chapter 7.2 „Connecting the machine to the mains supply", on page 71).

7.21.2 Platform assembly in service mode

WARNING

Risk of injury due to improper machine movements!

Improper machine movements can tip the machine over. This can cause serious or even fatal injuries.

– The service mode for the [platform function] is only permissible while the machine is braced.

1. Ensure that the machine is in work position (↳Chapter 7.9 „Moving the bracing into the work position", on page 101).
2. Switch on the machine (↳Chapter 7.21.1 „Switching the machine on/off for service mode", on page 154).
3. Unscrew and remove the covers (Fig.196/1).

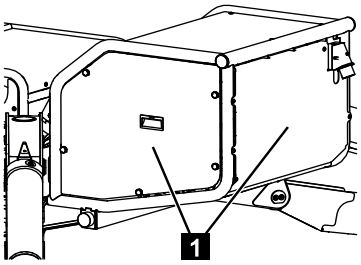

Fig. 196

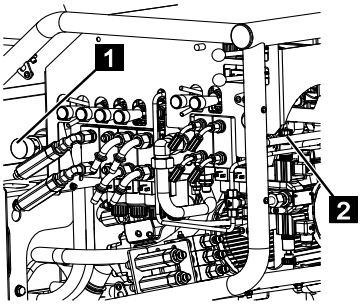

Fig. 197

4. Push in the [platform] valve (Fig.197/1) and lock it by turning it clockwise.
5. Screw the valve [LS] (Fig.197/2) in clockwise as far as it will go.
6. Operate the platform valves as per the table below.

Operation

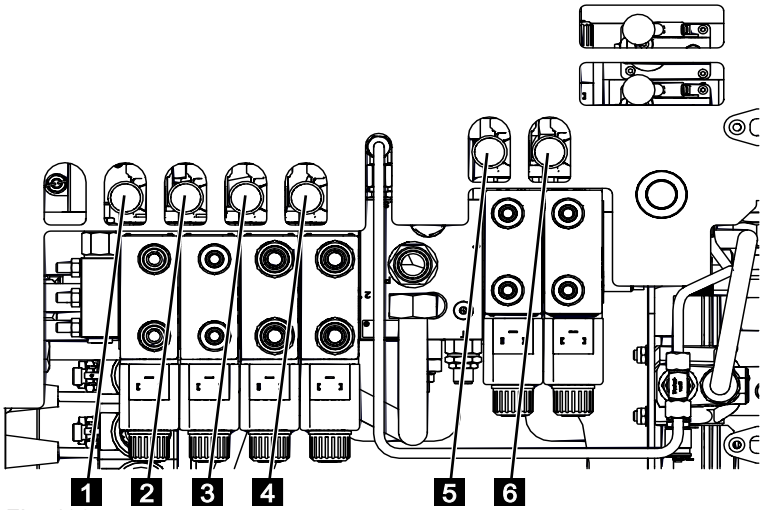

Fig. 198

Operating element	Symbol	Effect
Valve lever (Fig.198/1)		The working basket pivots clockwise (viewed from above)
		The working basket pivots anti-clockwise (viewed from above)
Valve lever (Fig.198/2)		Raises the basket boom
		Lowers the basket boom
Valve lever (Fig.198/3)		Raises the telescopic boom
		Lowers the telescopic boom
Valve lever (Fig.198/4)		Telescopes out the telescopic boom
		Telescopes in the telescopic boom
Valve lever (Fig.198/5)		Pivots the platform clockwise (seen from above)
		Pivots the platform anti-clockwise (seen from above)
Valve lever (Fig.198/6)		Tilt the working basket to the rear
		Tilt working basket to the front

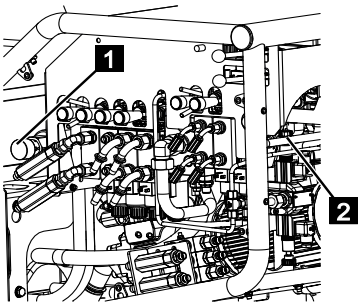

Fig. 199

7. After service mode, screw the valve [LS] (Fig.199/2) out again completely and unlock the valve [platform] (Fig.199/1) by turning it anti-clockwise. Screw the covers back into place.
8. To terminate service mode, you need to switch off the machine using the engine controller (↳Chapter 7.21.1 „Switching the machine on/off for service mode", on page 154).

WARNING

Risk of injury due to uncontrolled movements!

If the valves are set incorrectly in normal mode, there is a risk of uncontrolled movements. This can cause severe injuries.

– Ensure that all valves are turned into their original position.

7.21.3 Outrigger operation in service mode

WARNING

Risk of injury due to improper machine movements!

Improper machine movements can tip the machine over. This can cause serious or even fatal injuries.

– The service mode for the [outrigger function] is only permissible, if the platform is in transport position.

1. Ensure that the platform assembly is in transport position (↳Chapter 7.15 „Moving the platform assembly into transport position", on page 123).
2. Unscrew and remove the covers (Fig.200/1).

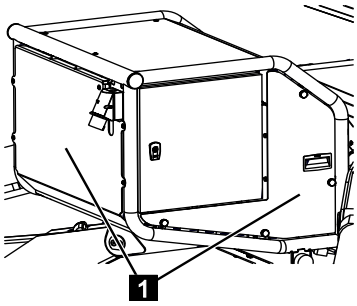

Fig. 200

3. Push in the valve [outrigger, crawler] (Fig.201/1) and lock it by turning it clockwise.
4. Screw the valve [LS] (Fig.201/2) in clockwise as far as it will go.
5. Operate the outrigger valves as per the table below.

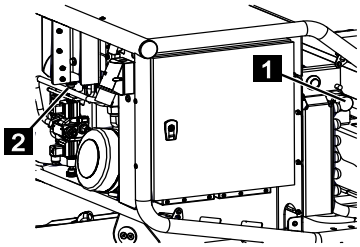

Fig. 201

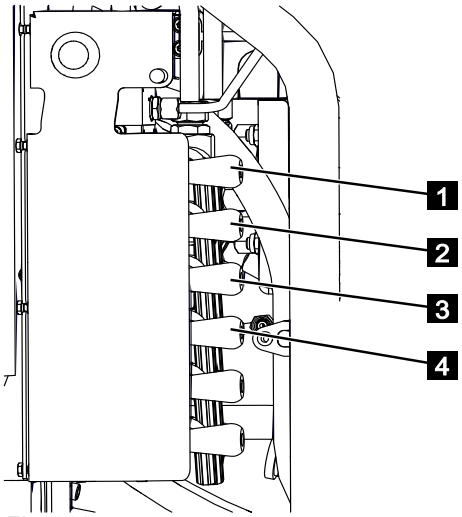

Fig. 202

Operating element	Symbol	Effect
Push the valve lever (Fig.202/1) forwards.		Outrigger 1 extends
Pull the valve lever (Fig.202/1) back.		Outrigger 1 retracts
Push the valve lever (Fig.202/2) forwards.		Outrigger 2 extends
Pull the valve lever (Fig.202/2) back.		Outrigger 2 retracts
Push the valve lever (Fig.202/3) forwards.		Outrigger 3 extends
Pull the valve lever (Fig.202/3) back.		Outrigger 3 retracts
Push the valve lever (Fig.202/4) forwards.		Outrigger 4 extends
Pull the valve lever (Fig.202/4) back.		Outrigger 4 retracts

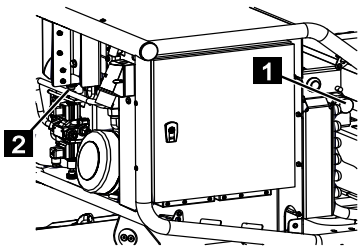

Fig. 203

6. After service mode, screw the valve [LS] (Fig.203/2) out again completely and unlock the valve [outrigger, crawler] (Fig.203/1) by turning it anti-clockwise. Screw the covers back into place.

7. To terminate service mode, you need to switch off the machine using the engine controller (Chapter 7.21.1 „Switching the machine on/off for service mode”, on page 154).

WARNING

Risk of injury due to uncontrolled movements!

If the valves are set incorrectly in normal mode, there is a risk of uncontrolled movements. This can cause severe injuries.

– Ensure that all valves are turned into their original position.

7.21.4 Crawler chassis in service mode

WARNING

Risk of injury due to improper machine movements!

Improper machine movements can cause the machine to topple over. This can cause severe injuries or even death.

– Executing service mode for the [crawler function] is only permitted if the platform assembly and the bracing are in transport position.

1. Ensure that the platform assembly is in transport position (↳Chapter 7.15 „Moving the platform assembly into transport position", on page 123).
2. Ensure that the bracing is in transport position (↳Chapter 7.16 „Moving the bracing into the transport position", on page 126).
3. Switch on the machine (↳Chapter 7.21.1 „Switching the machine on/off for service mode", on page 154).
4. Unscrew and remove the covers (Fig.204/1).

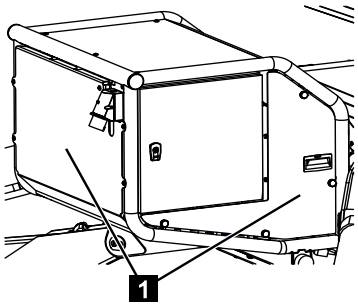

Fig. 204

5. Push in the valve [outrigger, crawler] (Fig.205/1) and lock it by turning it clockwise.
6. Screw the valve [LS] (Fig.205/2) in clockwise as far as it will go.

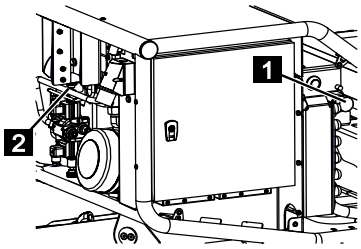

Fig. 205

7.21.4.1 Driving the crawler chassis

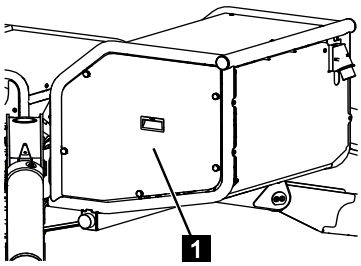

Fig. 206

1. Unscrew and remove the cover (Fig.206/1).
2. Operate the valves as per the table below.

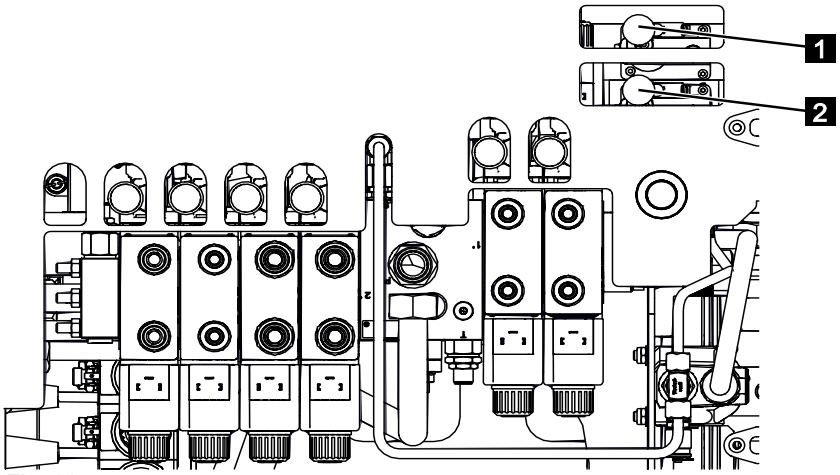

Fig. 207

Operating element	Symbol	Effect
Push the valve lever (Fig.207/1) forwards.		Moves the right-hand crawler chassis forwards
Pull the valve lever (Fig.207/1) back.		Moves the right-hand crawler chassis backwards
Push the valve lever (Fig.207/2) forwards.		Moves the left-hand crawler chassis forwards
Pull the valve lever (Fig.207/2) back.		Moves the left-hand crawler chassis backwards

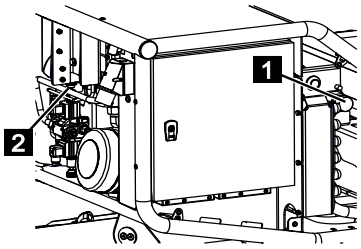

Fig. 208

3. After service mode, screw the valve [LS] (Fig.208/2) out again completely and unlock the valve [outrigger, crawler] (Fig.208/1) by turning it anti-clockwise. Screw the covers back into place.

4. To terminate service mode, you need to switch off the machine using the engine controller (↳Chapter 7.21.1 „Switching the machine on/off for service mode", on page 154).

WARNING

Risk of injury due to uncontrolled movements!

If the valves are set incorrectly in normal mode, there is a risk of uncontrolled movements. This can cause severe injuries.

– Ensure that all valves are turned into their original position.

7.21.4.2 Raising/lowering the crawler chassis

1. Operate the valves as per the table below.

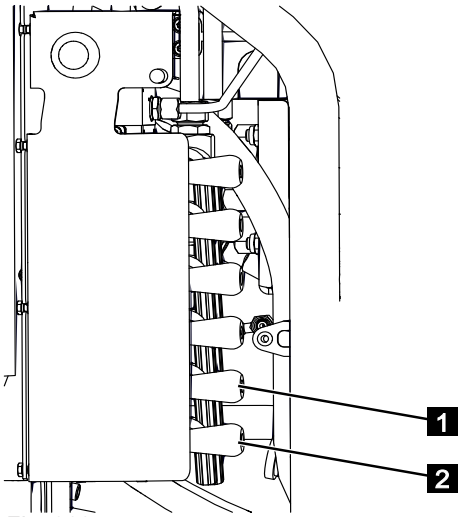

Fig. 209

Operating element	Symbol	Effect
Push the valve lever (Fig.209/1) forwards.		Lowers the left-hand crawler chassis
Pull the valve lever (Fig.209/1) back.		Raises the left-hand crawler chassis
Push the valve lever (Fig.209/2) forwards.		Lowers the right-hand crawler chassis
Pull the valve lever (Fig.209/2) back.		Raises the right-hand crawler chassis

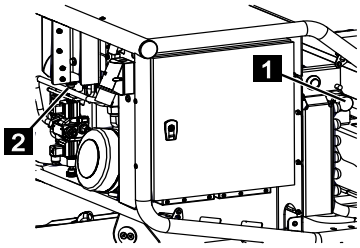

Fig. 210

2. After service mode, screw the valve [LS] (Fig.210/2) out again completely and unlock the valve [outrigger, crawler] (Fig.210/1) by turning it anti-clockwise. Screw the covers back into place.
3. To terminate service mode, you need to switch off the machine using the engine controller (↳Chapter 7.21.1 „Switching the machine on/off for service mode", on page 154).

WARNING

Risk of injury due to uncontrolled movements!

If the valves are set incorrectly in normal mode, there is a risk of uncontrolled movements. This can cause severe injuries.

– Ensure that all valves are turned into their original position.

7.22 12-V auxiliary drive

Personnel:

- Trained persons

Protective equipment:

- Occupational safety clothing
- Safety boots
- Safety helmet

If the machine has stopped because the fuel has run out, it can still be operated using the 12-V auxiliary drive.

This function is designed solely for use in the event that the machine stops because it has run out of fuel. It allows the machine to be moved into transport position as quickly as possible.

NOTICE

The auxiliary drive is neither an emergency mode nor a service mode.

It can be operated from the working basket only.

All safety equipment remains fully active in this mode.

1. Make sure that the combustion engine and the electric drive are switched off.
2. Switch on the radio control (↳Chapter 7.3.1 „Switching the radio control on/off", on page 73).

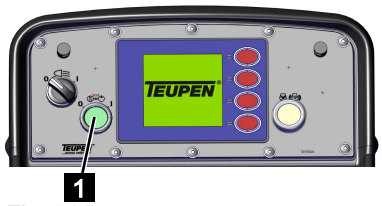

Fig. 211

3. Press and hold the auxiliary drive button (Fig.211/1) while simultaneously operating the machine using the radio control.

NOTICE

Limited battery capacity!

– Avoid travelling longer distances using the crawler chassis.
– When moving the platform, always choose the shortest possible path to the transport position.

7.23 Stowage space

The stowage space is used to house tools for the crawler chassis, hand levers for manual crawler chassis adjustment or the radio control, for example.

You can lock the stowage space using the key.

7.23.1 Opening the stowage space

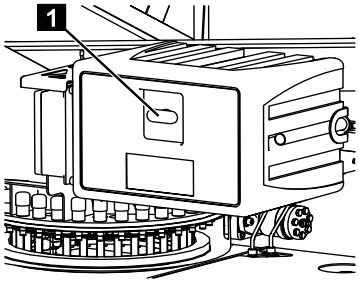

Fig. 212

1. Pull the cap off the lock (Fig.212/1).
2. Unlock the stowage space by turning the key clockwise in the lock (Fig.212/1).

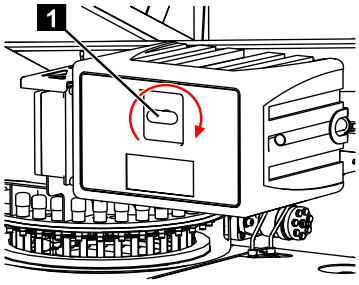

Fig. 213

3. Turn the lock (Fig.213/1) clockwise and pull the flap back.
4. Push the cap onto the lock (Fig.213/1).

7.23.2 Locking the stowage space

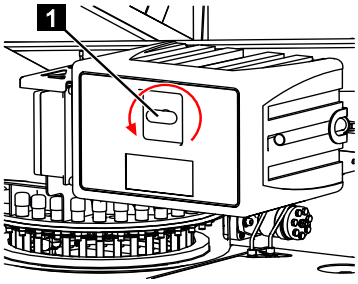

Fig. 214

1. Push the flap upwards.
2. Turn the lock (Fig.214/1) anti-clockwise.

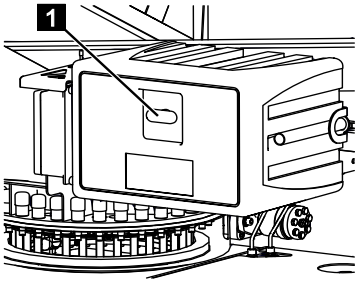

Fig. 215

3. Use the stowage space key to turn the lock (Fig.215/1) anti-clockwise to lock the stowage space.
4. Push the cap onto the lock (Fig.215/1).

7.24 Changing/charging the radio control's batteries

Personnel:

- Trained personnel

Protective equipment:

- Occupational safety clothing
- Safety shoes
- Safety helmet

3 rechargeable batteries are included for the radio control. One is in the radio control, one is in the mains charger and one is in the charger on the working basket.

NOTICE

A charged battery will last between 8 and 10 operating hours.

1. Switch off the machine (↳Chapter 7.3.1 „Switching the radio control on/off", on page 73).
2. Remove the discharged battery (Fig.216/1) from the back of the radio control.

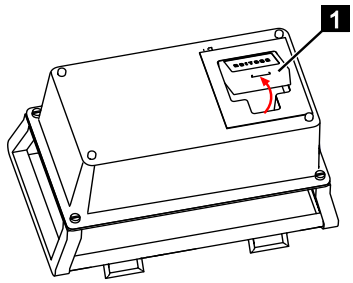

Fig. 216

3. Open the flap (Fig.217/1) on the control unit.

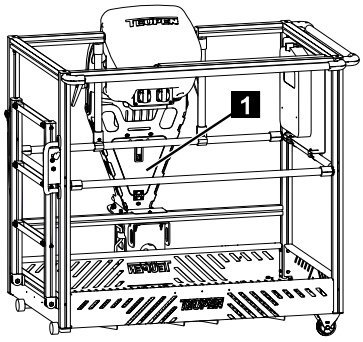

Fig. 217

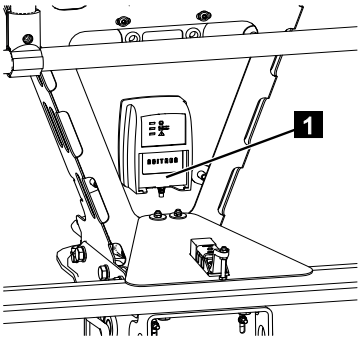

Fig. 218

4. Take a charged battery (Fig.218/1) out of the charger and place a discharged battery in the charger.
5. Insert the charged battery in the radio control.

NOTICE

Maximum recharge time is 4 hours.

Charger indicators

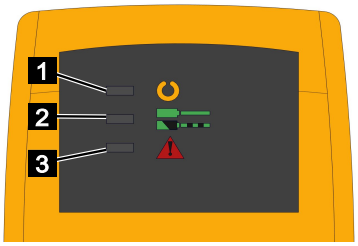

Fig. 219

- Charger is being supplied with voltage
  - Yellow LED (Fig.219/1) is lit
- Charging in progress
  - Green LED (Fig.219/2) flashing
- Charging complete
  - Green LED (Fig.219/2) is lit
- Battery faulty
  - Red LED (Fig.219/3) is lit

NOTICE

For further details, refer to the radio system manufacturer's operating instructions (↳Chapter 11.5 „Radio control", on page 282).

7.25 Checking the main battery's capacity

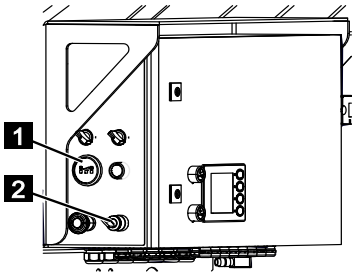

Fig. 220

Personnel:

- Trained persons

Protective equipment:

- Occupational safety clothing
- Safety boots
- Safety helmet

1. Turn the ignition switch (Fig.220/2) clockwise to *[1]*.
2. Check the battery capacity on the battery display (Fig.220/1) and compare it with the following table.

Indicators	Battery voltage	Description
	> 11.2 V	The battery does not need to be charged.
	> 10.5 V	Recharging the battery is absolutely essential.
	< 10.5 V	Recharging the battery is absolutely essential.

WARNING

Emergency operation inoperative!

If the machine's main battery voltage has dropped to < 11.2 V, battery capacity is insufficient for emergency operation.

- Before executing any platform functions, recharge the main battery (↳Chapter 7.26 „Charging the main battery", on page 172).
- Never begin platform operations without first checking the main battery's capacity. (Main battery voltage must be > 11.2 V!)
- Operation of the platform assembly at a main battery voltage of < 11.2 V is prohibited!

3. Check the main battery's capacity (↳Chapter 7.25 „Checking the main battery's capacity", on page 171).

7.26 Charging the main battery

Personnel:

- Specialist staff

Protective equipment:

- Occupational safety clothing
- Safety shoes
- Safety goggles

WARNING

Risk of injury due to improper operation!

Incorrect charger setup can destroy the battery. This can cause injury.

– Never recharge the battery without first reading the operating instructions for the employed charger.
– Always wear suitable safety goggles and suitable protection for your face and hands.
– Only charge batteries in well-ventilated spaces.
– Switch off the charger before connecting the cables to the battery in order to avoid generating sparks.

WARNING

Risk of injury due to improper operation!

Improper handling of the battery can cause serious injuries.

– Always allow a frozen battery to thaw before jump-starting or recharging it. (Risk of explosion)
– Do not lean over the battery during jump-starting or recharging. (Risk of chemical burns)
– Keep ignition sources (open lights, burning cigarettes etc.) away from the batteries. (Risk of explosion)
– Never use the battery's negative terminal for charging or bridging. (Risk of explosion)

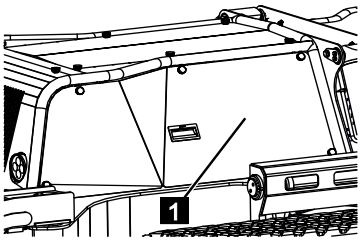

Fig. 221

1. Unscrew the cover (Fig.221/1).
2. Make sure that the charger is switched off.
3. Make sure that the ignition and all of the machine's electrical consumers are switched off.

Operation

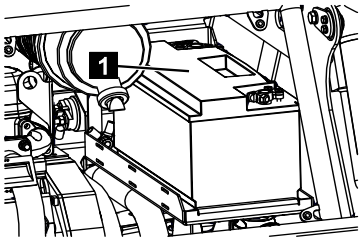

Fig. 222

4. Connect the red lead to the battery's positive terminal (Fig.222/1).
5. Connect the black lead to a suitable earth point in the engine compartment.
6. Make sure that the ignition and all electrical consumers are switched off.
7. Before switching on the charger, set the charger to the voltage and current matching the battery.

Disconnecting the charger

8. Make sure that the charger is switched off.
9. Disconnect the black lead.
10. Disconnect the red lead.
11. Screw the cover back on.

7.27 Jump-starting

Personnel:

- Specialist staff

Protective equipment:

- Occupational safety clothing
- Safety shoes
- Safety goggles

WARNING

Risk of injury due to improper operation!

Incorrect procedure can cause serious injury and damage.

– Always wear suitable safety goggles and suitable protection for your face and hands.
– Only use proper jump-start leads.
– Observe the procedure described below.

WARNING

Risk of injury due to improper operation!

Improper handling of the battery can cause serious injuries.

– Always allow a frozen battery to thaw before jump-starting or recharging it. (Risk of explosion)
– Do not lean over the battery during jump-starting or recharging. (Risk of chemical burns)
– Keep ignition sources (open lights, burning cigarettes etc.) away from the batteries. (Risk of explosion)
– Never use the battery's negative terminal for charging or bridging. (Risk of explosion)

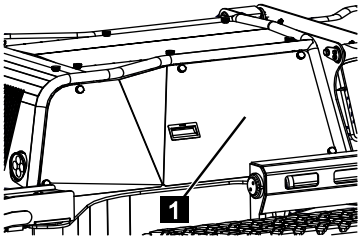

Fig. 223

1. Unscrew the cover (Fig.223/1).
2. Make sure that the charger is switched off.
3. Make sure that the ignition and all of the machine's electrical consumers are switched off.

Operation

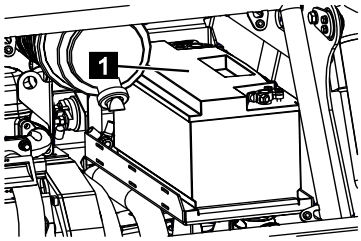

Fig. 224

4. Connect the red lead to the discharged battery's positive terminal (Fig.224/1).
5. Connect the other end of the red lead to the donor battery's positive terminal.
6. Connect the black lead to a suitable earth point in the engine compartment.
7. Connect the other end of the black lead to the donor battery's negative terminal.
8. Make sure the leads cannot come into contact with any rotating parts.
9. Switch on the machine (↳Chapter 7.3.3 „Switching the machine on/off using the combustion engine", on page 75)).
10. Once jump-starting has worked, disconnect the leads by reversing the above sequence.
11. Screw the cover back on.

7.28 Control panel adjustment (optional)

Personnel:

- Trained persons

Protective equipment:

- Occupational safety clothing
- Safety boots
- Safety helmet

You can reduce the width to traverse narrower passages by adjusting the control panel.

Pushing down the control unit

1. Remove the working basket (Chapter 7.17 „Removing/mounting the working basket", on page 131).
2. Release the arrester lever (Fig.225/1).

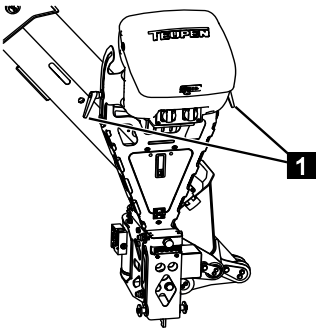

Fig. 225

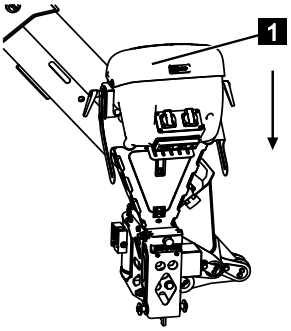

Fig. 226

3. Push the control unit (Fig.226/1) down in the direction of the arrow.
4. Tighten the arrester lever slightly.

NOTICE

Before you can operate the machine from the working basket again, the control unit needs to be pushed back up!

Pushing up the control unit

5. Reverse the above sequence to push up the control unit.

7.29 Locks

7.29.1 Resetting the combination on the shackle lock

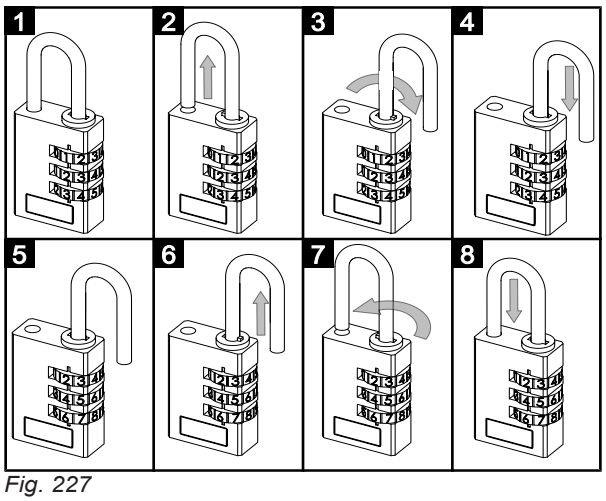

Fig. 227

1. Set the last 3 digits of the serial number (in the example 123).
2. Pull up the shackle.
3. Turn the shackle 180°.
4. Push the shackle down.
5. Enter the desired new number (in the example 246).
6. Pull up the shackle.
7. Turn the shackle 180°.
8. Push the shackle down.

7.29.2 Combination lock on control panel

The combination for the combination lock is set in the factory to match the last 3 digits of the serial number. In the following examples the serial number of the aerial lift platform is 141123.

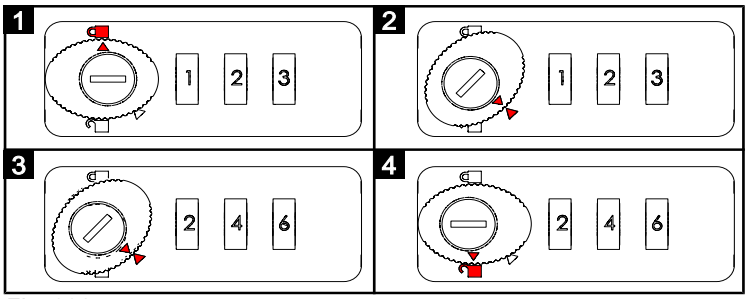

Fig. 228

1. Set the last 3 digits of the serial number (123 in the example).
2. Turn the knob anti-clockwise to the *[arrow]* symbol.
3. Enter the new desired combination (246 for example).
4. Turn the knob clockwise to the *[open padlock]* symbol.

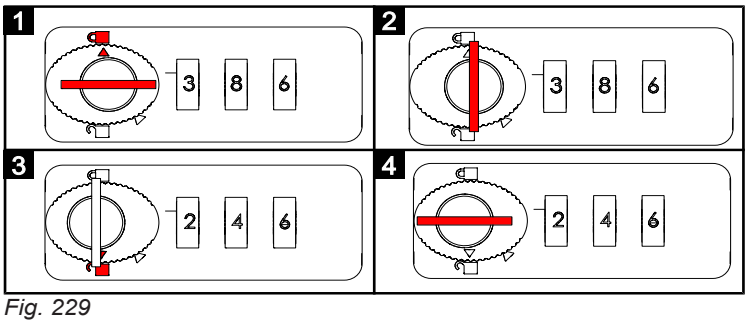

Fig. 229

5. Insert the key.
6. Turn key 90° clockwise.
7. Leave the key in this position and turn the knob 180° anti-clockwise.
   – The combination lock automatically resets the combination to the original.
8. Turn the key 90° anti-clockwise and remove it.

8 Maintenance

8.1 Safety instructions for maintenance

Electrical current

DANGER

Risk of fatal injury due to electrical current!

Contact with live components can cause fatal injuries. Switched on, electrical components can make uncontrolled movements and lead to severe injuries.

– Before starting work, switch off the voltage supply and secure it to prevent it from being restarted.

Secure against restart

WARNING

Risk to life due to unauthorised restart!

Unauthorized restart of the power supply during troubleshooting and fault elimination poses a risk of serious injury or death for the people in the danger zone.

– Before starting work, switch off the power supply and secure against restart.

Improperly-executed maintenance work

WARNING

Risk of injury due to improperly-executed maintenance work!

Improper maintenance can cause severe injuries and significant property damage.

– Before starting work, ensure that there is sufficient assembly space.
– Make sure the assembly space is orderly and clean! Loosely-stacked components and tools or those left lying around are a source of accidents.
– Do not loosen connections sealed with yellow signal paint.
– If components have been removed, make sure they are assembled correctly, re-fit all fastening elements and adhere to screw tightening torques.
– Before recommissioning, heed the following points:

⇨ Make sure that all maintenance work is performed and completed according to the details and instructions in these instructions.

⇨ Make sure that there are no persons in the danger zone.

⇨ Make sure that all covers and safety devices are installed and functioning properly.

Exhaust gases

WARNING

Risk to life from poisoning or suffocation due to exhaust gases!

When inhaled, exhaust gases can lead to suffocation and cause severe poisoning as well a illness of the respiratory system.

- Always ensure fresh air supply when working on the machine in diesel engine mode.
- Any person inhaling exhaust gases must be provided with fresh air immediately and checked by a physician.

Batteries

WARNING

Risk of injury through improper handling of batteries!

Improper handling of batteries may cause them to explode or to leak harmful fluids. Skin contact with these fluids can cause chemical burns. Ingestion can cause severe poisoning. Eye contact can result in permanent blindness.

- Never short-circuit a battery's contacts (positive and negative terminals).
- Never use or store batteries in areas subject to potentially explosive atmospheres or where temperatures could become high.
- Never try to solder, repair, modify, convert or disassemble batteries.
- Always keep batteries out of reach of unauthorised persons.
- To prevent fire, overheating, explosion or battery fluid leaks, always protect batteries from hard impacts, high weight loads and any other harmful effects. Leaked fluid may combust.
- Avoid contact with leaked fluid.

Measures after contact with battery fluid:

- Wash skin that has come into contact with battery fluid with plenty of water and soap.
- In the event of eye contact, immediately rinse the eye, including under the eyelid, with clean water for at least 15 minutes. Direct a soft stream of water directly into the eye, do not rub. Seek medical attention immediately.

Hot surfaces

WARNING

Risk of injury due to hot surface!

Surfaces of motor components can heat up considerably during operation. Skin contact with hot surfaces causes severe burns to the skin.

- Avoid contact with hot motor components such as exhaust system, radiator, hoses and engine block.
- Check before all work on engine components, as to whether these are hot. Allow them to cool down if necessary.

Hot operating materials

WARNING

Risk of injury due to hot operating materials!

Operating materials (coolants, motor oil or hydraulic oil) can reach high temperatures during operation. Skin contact with hot operating materials causes serious burns to the skin.

- Avoid contact with hot operating material.
- Prior to starting any work check that operating materials are not hot. Allow them to cool down if necessary.

Anti-freeze agents

WARNING

Health hazard due to anti-freeze agents!

The coolant of the diesel engine consists of a water anti-freeze agent mixture. Upon body contact, ingestion or inhalation of areosoles, anti-freeze agents can lead to serious health problems.

- Avoid contact with anti-freeze agents.
- Do not eat, drink or smoke when handling anti-freeze agents. Prior to breaks and completion of work, wash hands.
- Wear protective gloves when working with anti-freeze agents.

Measures after contact with anti-freeze agents:

- Wash skin with lots of water after contact.
- Rinse eyes thoroughly with water for at least 15 minutes after contact and consult a physician.
- Rinse out mouth after ingesting and drink lots of water thereafter. Consult a physician.
- After aerosol inhalation go outdoors for fresh air.

Motor oil

WARNING

Risk of injury due to motor oil!

Motor oil contains toxic substances that can trigger inflammation and are carcinogenic.

- Prevent skin contact with motor oil.
- After accidental skin contact, immediately wash your hands with soap. Do not use gasoline, solvent or other chemical cleaners.

Environmental protection

Observe the following notes on environmental protection when performing maintenance work:

- At all lubrication points that are lubricated by hand, remove escaping, old or excess greases and dispose of in accordance with the local regulations.
- Collect changed oils in suitable containers and dispose of in accordance with local regulations.

The following sections describe the maintenance work which is required to ensure the machine can be operated in the optimum manner and fault-free.

If increased wear is discovered during regular checks, the requisite maintenance intervals will need to be shortened to match the actual signs of wear. Contact the manufacturer if you have any questions regarding maintenance work or intervals, see the contact data on page 2.

8.2 Maintenance work

8.2.1 Cleaning the machine

Personnel:

- Specialist staff

Protective equipment:

- Occupational safety clothing
- Safety shoes
- Safety goggles

NOTICE

Risk of material damage due to improper cleaning!

Improper cleaning can cause damage to the machine.

– Do not use any acid-based or aggressive cleaning agents.
– Remove all cleaning agents thoroughly with clear water.
– Do not clean the respectively marked components with high-pressure jets.

Fig. 230

1. Pull the mains plug.
2. Make sure that all covers are fitted properly.
3. Remove coarse dirt with a high-pressure jet. Do not clean components (Fig.230) with the respective marking with a high-pressure jet.
4. Clean the machine with a sponge, acid-free household cleaner and a water hose.
5. After cleaning the machine, lubricate it.

8.2.2 Tensioning the chain

Personnel:

- Qualified personnel

Protective equipment:

- Occupational safety clothing
- Safety boots

Special tool:

- Grease gun

Materials:

- Multi-purpose grease

1. Move the machine into work position (↳Chapter 7.10 „Operating the bracing", on page 106). The machine must be braced properly and the crawler tracks must no longer touch the ground.
2. Take the button head coupler out of the stowage space (Fig.231/1).
3. Unscrew and remove the maintenance cover (Fig.231/2).

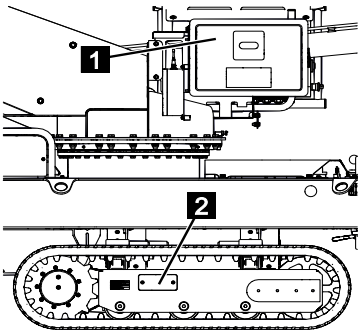

Fig. 231

4. Push the button head coupler (Fig.232/1) onto the grease tensioning cylinder (Fig.232/3) with the grease nipple (Fig.232/2) facing forwards.

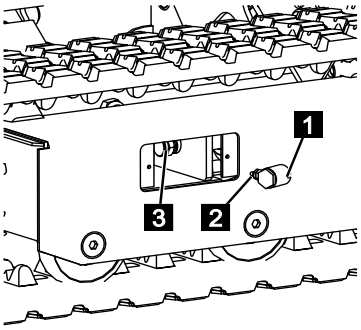

Fig. 232

5. Turn the button head coupler (Fig.233/1) 180° clockwise until the grease nipple (Fig.233/2) points outwards.
6. Use a grease gun to inject multi-purpose grease through the grease nipple (Fig.233/2) until the crawler track has been tensioned.

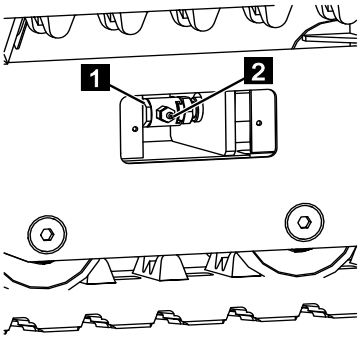

Fig. 233

Maintenance

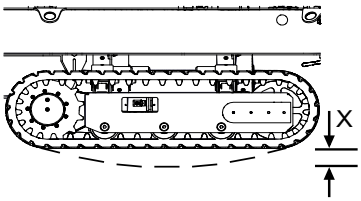

Fig. 234

7. Ensure that there is a slack (Fig.234/X) of 10 to 15 mm.
8. Make sure that no lubricant escapes on the grease nipple.

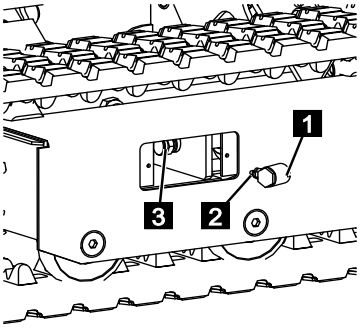

Fig. 235

9. Turn the button head coupler (Fig. 181/1) back 180° anti-clockwise and pull it off the grease tensioning cylinder (Fig. 181/2).

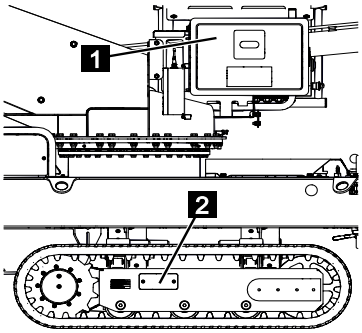

Fig. 236

10. Clean the button head coupler put it back in the stowage space (Fig.236/1).
11. Screw the maintenance cover (Fig.236/2) back on.

8.2.3 Checking/topping up hydraulic oil

Personnel:

- Qualified personnel

Protective equipment:

- Occupational safety clothing
- Safety boots

Materials:

- Hydraulic oil (↳Chapter 4.8 „Consumables", on page 40)

1. Move machine to transport position (↳Chapter 7.16 „Moving the bracing into the transport position", on page 126).
2. Make sure that the machine is aligned horizontally.
3. Switch off the machine (↳Chapter 7.3 „Switching the machine on/off", on page 73).
4. Unscrew the cover (Fig.237/1).

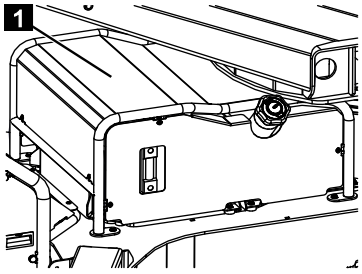

Fig. 237

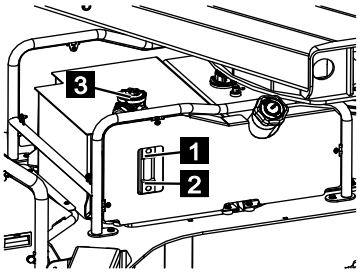

Fig. 238

5. Check the oil level in the inspection glasses for maximum (Fig.238/1) and minimum (Fig.238/2) level.
6. The hydraulic oil level must reach the maximum marking (Fig.238/1). If necessary, top up the hydraulic oil.
7. To do so, unscrew and remove the cap (Fig.238/3).
8. Fill the hydraulic oil up to the maximum marking on the inspection glass (Fig.238/1).
9. Screw the cap (Fig.238/3) back on.
10. Collect any leaked hydraulic oil and dispose of it properly.
11. Screw the cover (Fig.239/1) back on.

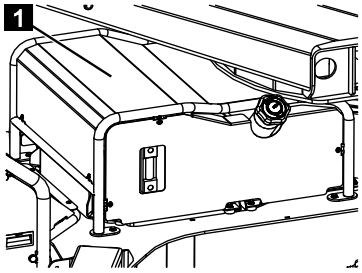

Fig. 239

8.2.4 Draining hydraulic oil

Personnel:

- Specialist staff

Protective equipment:

- Occupational safety clothing
- Safety shoes
- Safety goggles

Special tool:

- Oil drain hose

1. Brace the machine (↳Chapter 7.10 „Operating the bracing", on page 106).
2. Switch off the machine (↳Chapter 7.3 „Switching the machine on/off", on page 73).
3. Remove the cover plate (Fig.240/1).

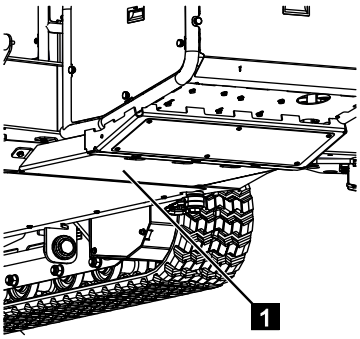

Fig. 240

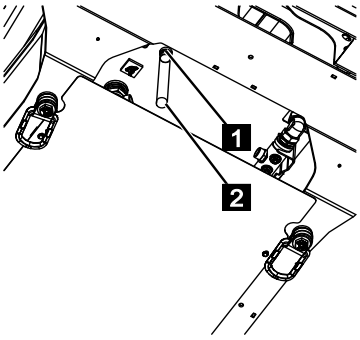

Fig. 241

4. Place a suitable container under the oil drain plug (Fig.241/1).
5. Open the cap on the oil drain plug (Fig.241/1).
6. Screw the oil drain hose (Fig.241/2) onto the oil drain plug. This opens the threaded connection and allows the hydraulic oil to drain.
7. When the hydraulic oil has drained, unscrew the oil drain hose again and close the oil drain plug.

8.2.5 Replace the hydraulic filter

Personnel:

- Specialist staff

Protective equipment:

- Occupational safety clothing
- Safety shoes
- Safety goggles

Materials:

- Filter inserts

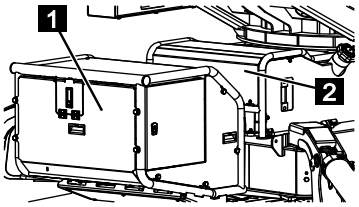

Fig. 242

The recirculation filter is on the hydraulic tank (Fig.242/1) and the intake filter is in the hydraulics unit (Fig.242/2).

CAUTION

Risk of material damage due to improper filling!

An insufficient hydraulic oil level can damage the hydraulic pumps.

– After changing the filters, always check the hydraulic oil level (↳Chapter 8.2.3 „Checking/topping up hydraulic oil", on page 186).

8.2.5.1 Changing the intake filter

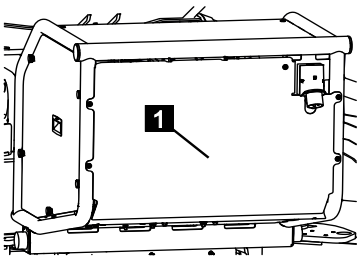

Fig. 243

1. Unscrew and remove the cover (Fig.243/1).

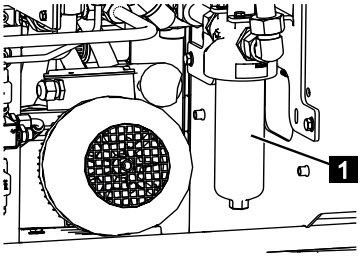

Fig. 244

2. Place a suitable container for hydraulic oil under the filter (Fig.244/1).
3. Unscrew the filter bowl (Fig.244/1).
4. Collect leaked hydraulic oil and dispose of it properly.
5. Check filter bowl for damage.

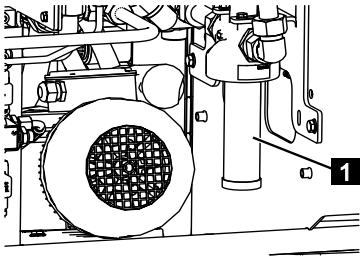

Fig. 245

6. Remove the filter insert (Fig.245/1) and insert a new filter insert.
7. Screw the filter bowl back in.
8. Screw the cover back on.

8.2.5.2 Changing the recirculation filter

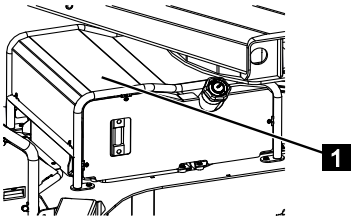

Fig. 246

1. Remove the cover (Fig.246/1).

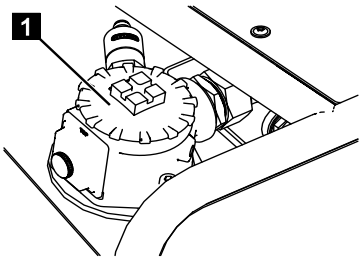

Fig. 247

2. Place suitable cloths for hydraulic oil around the hydraulic filter (Fig.247/1).
3. Unscrew the hydraulic filter's cap (Fig.247/1).

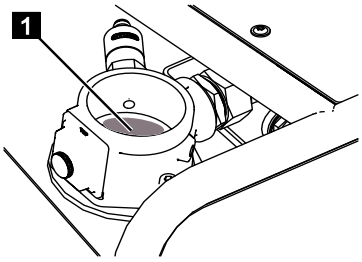

Fig. 248

4. Remove the filter insert (Fig.248/1) and insert a new filter insert.
5. Collect leaked hydraulic oil and dispose of it properly.

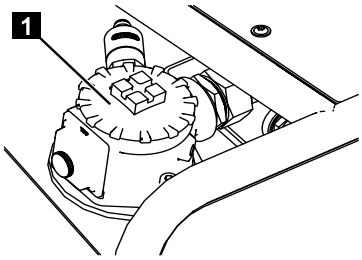

Fig. 249

6. Screw the hydraulic filter's cap back on again (Fig.249/1).
7. Fit the cover.

8.2.6 Checking the gear oil for the crawler chassis

Personnel:

- Qualified personnel

Protective equipment:

- Occupational safety clothing
- Safety boots

Material:

- Gear oil (Chapter 4.8 „Consumables", on page 40)

NOTICE

Risk of material damage due to improper filling!

If the oil level is incorrect, the hydraulic system mail fail or become damaged.

– Check the oil level regularly.

The chain drives each have a separate gearbox. The following instructions apply for one gearbox.

1. Move the machine into transport position on level ground (Chapter 7.16 „Moving the bracing into the transport position", on page 126).
2. Align the machine (Chapter 7.6 „Driving the machine", on page 87) so that the threaded connection (Fig.250/1) lies above the centre of the gearbox unit (Fig.250/2).
3. Switch off the machine (Chapter 7.3 „Switching the machine on/off", on page 73).

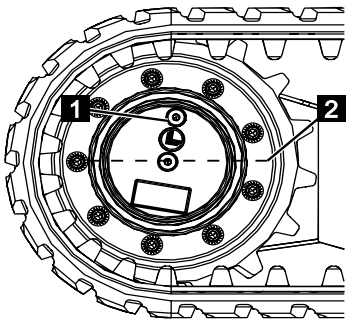

Fig. 250

4. Unscrew the screw connections (Fig.251/1 and 2).

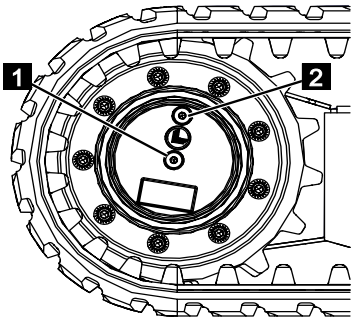

Fig. 251

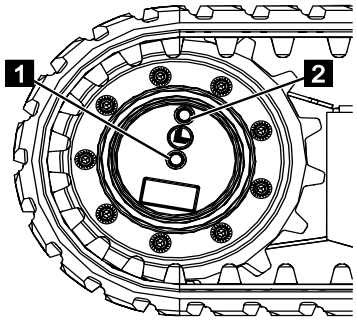

Fig. 252

5. Check the oil level by sight. The gearbox must be filled with oil up to the bottom edge of the threaded hole (Fig.252/1).
6. If required, top up gearbox oil. To do so, slowly top up the oil through the drilled hole (Fig.252/2) until it reaches the bottom edge of the threaded hole (Fig.252/1).
7. Make sure that the seals and copper washers on the screw connections are in place and free of damage.

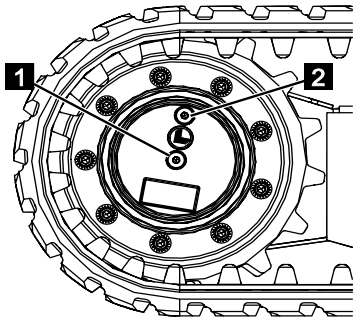

Fig. 253

8. Re-tighten the screw connections (Fig.253/1 and 2) with the seals or copper washers.

8.2.7 Lubricating the boom sections and ropes

Personnel:

- Qualified personnel
- Trained person

Protective equipment:

- Occupational safety clothing
- Safety boots

Material:

- (↳Chapter 4.8 „Consumables", on page 40)

1. Move the machine into the wide work position and brace it slightly (↳Chapter 7.10 „Operating the bracing", on page 106).
2. Secure the telescopic boom using a crane (Fig.254/1).

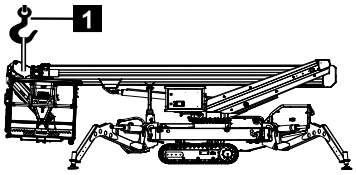

Fig. 254

WARNING

Risk of injury if safety equipment is deactivated!

When operating the machine in emergency mode, all safety equipment is disabled.

– Adhere to the operating sequence below and follow the instructions precisely.

3. Open the maintenance flaps (Fig.255/1) on both sides.

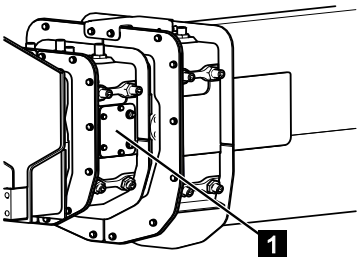

Fig. 255

CAUTION

Risk of crushing!

Do not reach into moving parts.

4. Fully extend the telescopic boom using emergency mode controls (↳Chapter 7.20.1 „Platform assembly in emergency mode", on page 140) or service mode controls (↳Chapter 7.21 „Service mode", on page 153). Guide the telescopic boom with the crane while it is extending and hold it straight.

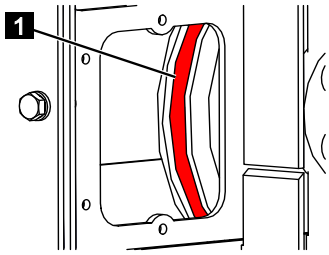

Fig. 256

5. While the telescopic boom is extending, check the ropes (Fig.256/1) on the left side for damage and apply spray grease.
6. Clean the extenders' slider surfaces with detergent and grease them again afterwards.
7. Fully retract the telescopic boom. Guide the telescopic boom with the crane while it is retracting and hold it straight.

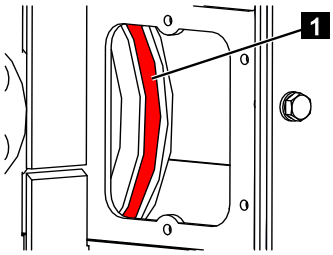

Fig. 257

8. While the telescopic boom is retracting, check the ropes (Fig.257/1) on the right side for damage and apply spray grease.
9. Fit the maintenance covers again.

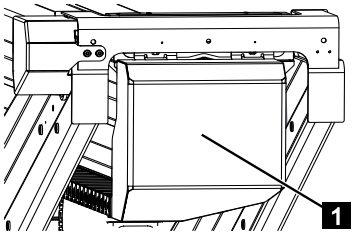

Fig. 258

10. Remove the cover (Fig.258/1) from the profile.

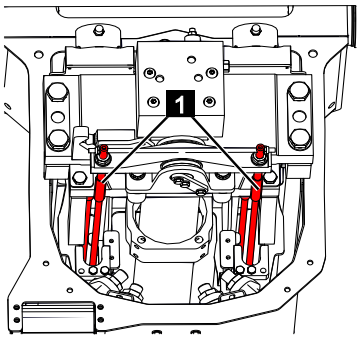

Fig. 259

11. Check the extender ropes (Fig.259/1) for damage.
12. Check the insides of the profiles for soiling. Clean if necessary.

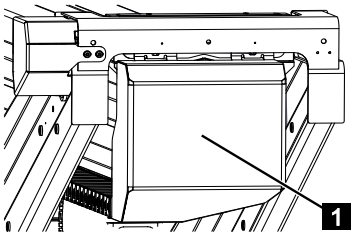

Fig. 260

13. Properly fit the cover (Fig.260/1) again.
14. Remove the crane.

15. Terminate emergency mode or service mode.

WARNING

Risk of injury due to uncontrolled movements!

If the valves are set incorrectly in normal mode, there is a risk of uncontrolled movements. This can cause severe injuries.

– Ensure that all valves are turned into their original position.

8.2.8 Lubricating the rotating assembly

Personnel:

- Qualified personnel

Protective equipment:

- Occupational safety clothing
- Safety boots

Tools:

- Grease gun

Material:

- Multi-purpose grease (↳Chapter 4.8 „Consumables”, on page 40)

1. Use a grease gun to inject multi-purpose grease through the rotating assembly’s grease nipples (Fig.261/1).
2. Remove the excess grease and dispose of it properly.

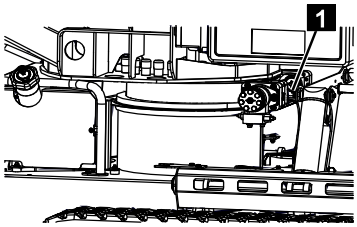

Fig. 261

8.2.9 Tightening torques for rotating assembly

WARNING

Danger through incorrect tightening torques!

If screws and bolts are tightened with incorrect tightening torque, components may tear free and cause injury and damage.

– Never exceed the maximum permissible tightening torque.
– Regularly double-check the tightening torques.
– Always observe the applicable guidelines and design criteria for threaded connections.

The table lists the tightening torques required for reaching the maximum permissible tightening of the rotating assembly's bolts.

Bolt dimensions	Bolt grade	Tightening torque
M12	10.9	110 Nm
M16	10.9	270 Nm

8.2.10 Winter operation

In order to prevent faults during operation of the aerial lift platform in wintry weather, the necessary measures include the following preventive measures:

- Prevent build-up of water residue.
- The water drain holes have to be free.
- Do not use steam jets on the machine.
- Keep the ladder and the floor of the working basket free from snow and ice.
- Sliding blocks must not become frozen on components.
- Make sure that chains and ropes which are used to retract and extend the profile are kept free from ice.
- Check the sensor equipment to make sure it is clean.
- All the limit switches and proximity switches must be free from snow and ice. Use heat or lubricant with de-icing or water-resistant / anti-corrosive properties to restore freedom of movement.
- In extreme cold, the hydraulic system needs to be heated up. This can be achieved by keeping the drive unit running or by moving the crawler tracks, outriggers or platforms slightly.
- Observe the drive motor's operating instructions (e.g. running the engine to operating temperature, anti-freeze, battery charge etc.).

8.2.11 Drive units overview

NOTICE

These operating instructions do not include any detailed data on maintenance, commissioning or upkeep of the drive motor. For details, refer to the included motor manufacturer's operating instructions. (↳Chapter 11.4 „Drive units", on page 258)

8.2.11.1 Overview of diesel engine

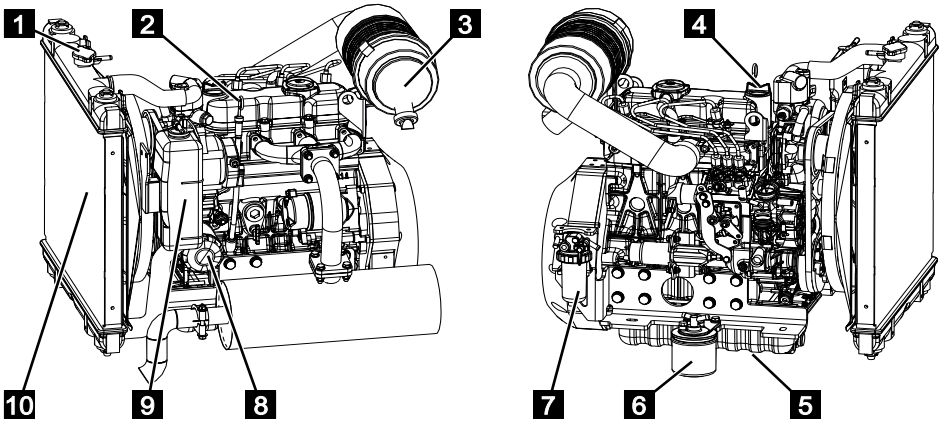

Fig. 262

1	Radiator pressure flap	6	Fuel filter (return)
2	Oil dipstick	7	Fuel filter (intake)
3	Air cleaner box	8	Oil filter
4	Oil filler neck	9	Coolant back-up tank
5	Oil drain plug (concealed)	10	Radiator

8.3 Maintenance schedule

■ = check	■ = lubricate	■ = change ▌▌ = recommen-ded change	◢ = clean	■ = re-tighten	⊸ = adjust

* When changing hydraulic hoses or opening the hydraulic system.

	As necessary and once a year	After the first 50 op. hrs.	Every 50 op. hrs.	Every 150 op. hrs.	Every 800 op. hrs.	Every 6 years	Every 10 years
Crawler chassis							
Crawler track tension	■ ⊸						
Profile	■				■		
Gear oil					■		
Slider surfaces	■ ■				■ ■		
Guide rollers and deflector pulleys	■						
Attachment of crawler chassis/tracks	■						
Hydraulic components free of leaks	■						
Chassis							
Articulated joints		■		■	■		
Hydraulic oil	■*				■		
Hydraulics filter: intake filter	■* ■*				■		
Hydraulics filter: return filter	■* ■*				■		
Chassis pressures					■ ⊸		
Outrigger function pressures					■ ⊸		
Lift platform function pres-sures					■ ⊸		
Hydraulic hoses				■	■	▌▌	
Electrical switches and sensors	⊸				■		
Bracing	■						
Bracing locking pins	■						
Frame and weld seams	■						
Operation of valves for emer-gency control	■						
Control box	■						
Lift boom holder							
Articulated joints		■		■	■		
Rotating assembly			■		■		
Rotating assembly bolting		■			■ ■		
Electrical switches and sensors	⊸				■		
Main control box	■						

	As necessary and once a year	After the first 50 op. hrs.	Every 50 op. hrs.	Every 150 op. hrs.	Every 800 op. hrs.	Every 6 years	Every 10 years
Profiles							
Articulated joints		■		■	■		
Slider surfaces	◢ ■		◢ ■		◢ ■		
Hydraulic hoses				■	■	▮▮	
Energy supply chains				■	■		
Retraction and extension ropes				■	■		■
Retraction and extension chains			■		■		
Electrical switches and sensors	⚒				■		
Hydraulic components free of leaks	■						
Basket boom							
Articulated joints		■		■	■		
Levelling cylinder		■					
Basket pivot motor bolting		■			■ ■		
Basket frame		■			■		
Basket scale	■						
Working basket							
Working basket		■			■		
Control head	■						
Sockets (working basket)	■						
Lifting device		■			■		
Function check							
Emergency controls for entire machine	■						
Operation of all control pan-els' functions	■						
General							
Annual maintenance per-formed as per check list (see inspection log)	■				■		
Electrical switches and sensors	■						
Hydraulic hoses and cables on moving points	■						
Hydraulic hoses						■ ▮▮	
Hydraulic components free of leaks	■						

Maintenance

	As necessary and once a year	After the first 50 op. hrs.	Every 50 op. hrs.	Every 150 op. hrs.	Every 800 op. hrs.	Every 6 years	Every 10 years
Drive unit							
For performing maintenance work on the drive unit, refer to the manufacturer's operating instructions (↳Chapter 11.4 „Drive units", on page 258).							
Documentation							
Type plate	■						
Operating instructions in working basket	■						
Adhesive labels on entire machine	■						

■ = check	■ = lubricate	■ = change ▌▌ = recommended change	◢ = clean	■ = re-tighten	= adjust

* When changing hydraulic hoses or opening the hydraulic system.

NOTICE

Observe the prescribed consumables for maintenance (↳Chapter 4.8 „Consumables", on page 40).

8.4 Maintenance work on the auxiliary frame for trucks

The following sections describe the maintenance work which is required to ensure the transport frame can be operated in the optimum manner and fault-free.

Contact the manufacturer if you have any questions regarding maintenance work or intervals.

See contact details on page 2.

Adhere to the truck's maintenance schedule!

8.4.1 Checking the lighting system

Fig. 263

1. Check the lighting system for damage. (Warning stripes, cables, connectors,...)
2. Check that the lighting system is working:

- Brake light 12V//21W (Fig.263/1)
- Dipped beam 12V/10W (Fig.263/2)

8.4.2 Frame attachment

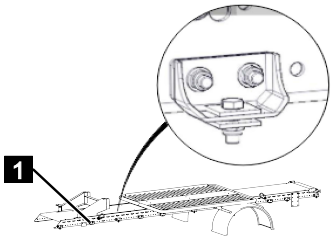

Fig. 264

1. Tighten all frame attachments (Fig.264/1) with the correct torque (↳Chapter 8.4.3 „Tightening torques", on page 203).

8.4.3 Tightening torques

WARNING

Danger through incorrect tightening torques!

If screws are tightened with the incorrect tightening torque, components can come loose and cause injury and damage.

– Never exceed the maximum allowable tightening torque.
– Regularly double-check the tightening torques.
– Always observe the applicable guidelines and design criteria for threaded connections.

The table lists the tightening torques required for reaching the maximum permissible pretension for the fastening screws on the transport frame.

Screw size	Screw quality	Tightening torque
M12	10.9	125 Nm
M20	Special screw	250 Nm

8.4.4 Checking attachment points

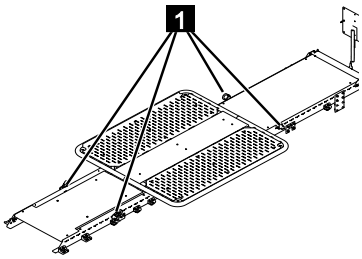

Fig. 265

1. Tighten attachment points (Fig.265/1) with the correct torque (↳Chapter 8.4.3 „Tightening torques", on page 203) and check for damage and movability. Replace if necessary.

8.5 Maintenance schedule, auxiliary frame for trucks

Interval	Maintenance work	Personnel
as necessary	Cleaning the transport frame	Trained persons
annually	Tighten all fastening screws on the frame (↳Chapter 8.4.2 „Frame attachment", on page 203).	Qualified personnel
	Check the attachment points for damage and tighten (↳Chapter 8.4.4 „Checking attachment points", on page 204).	Qualified personnel
	Have lashing equipment checked.	Competent person
	Check lighting system for damage (↳Chapter 8.4.1 „Checking the lighting system", on page 203).	Qualified personnel

9 Faults

The following section describes possible causes of faults and the work to eliminate them. If malfunctions occur repeatedly, the maintenance intervals should be shortened according to the actual load conditions. In case of faults which cannot be eliminated using the following instructions, contact the manufacturer, see contact data on page 2.

9.1 Safety instructions for fault clearance

Electrical current

DANGER

Risk of fatal injury due to electrical current!

Contact with live components can cause fatal injuries. Switched on, electrical components can make uncontrolled movements and lead to severe injuries.

– Before starting work, switch off the voltage supply and secure it to prevent it from being restarted.

Secure against restart

WARNING

Risk to life due to unauthorised restart!

Unauthorized restart of the power supply during troubleshooting and fault elimination poses a risk of serious injury or death for the people in the danger zone.

– Before starting work, switch off the power supply and secure against restart.

Improperly-performed work for fault repair

WARNING

Risk of injury due to improper fault repair!

Troubleshooting procedures carried out incorrectly can cause serious injuries.

– Before starting work, ensure that there is sufficient assembly space.
– Make sure the assembly space is orderly and clean! Parts or tools loosely piled or lying about are potential accident hazards.
– Do not loosen connections sealed with yellow signal paint.
– If parts are removed, make sure they are re-fitted correctly, that all mounting elements are replaced and that bolt tightening torque requirements are adhered to Rotating assembly tightening torques.
– Before recommissioning, heed the following points:

  ⇨ Make sure that all fault repair work is performed and completed according to the details and instructions in these instructions.

  ⇨ Make sure that there are no persons in the danger zone.

  ⇨ Make sure that all covers and safety devices are installed and functioning properly.

Moving parts

WARNING

Risk of injury due to moving parts!

Rotating and/or linearly moving parts can cause serious injuries.

– Prior to all work for the troubleshooting on moving components, switch the machine off and secure against unintentional restart. Wait until all components have come to a standstill.
– While in the danger zone, wear closely-fitting protective clothing with low tear strength.

Exhaust gases

WARNING

Risk to life from poisoning or suffocation due to exhaust gases!

When inhaled, exhaust gases can lead to suffocation and cause severe poisoning as well a illness of the respiratory system.

– Always ensure fresh air supply when working on the machine in diesel engine mode.
– Any person inhaling exhaust gases must be provided with fresh air immediately and checked by a physician.

Hot surfaces

WARNING

Risk of injury due to hot surface!

Surfaces of motor components can heat up considerably during operation. Skin contact with hot surfaces causes severe burns to the skin.

– Avoid contact with hot motor components such as exhaust system, radiator, hoses and engine block.
– Check before all work on engine components, as to whether these are hot. Allow them to cool down if necessary.

Hot operating materials

WARNING

Risk of injury due to hot operating materials!

Operating materials (coolants, motor oil or hydraulic oil) can reach high temperatures during operation. Skin contact with hot operating materials causes serious burns to the skin.

– Avoid contact with hot operating material.
– Prior to starting any work check that operating materials are not hot. Allow them to cool down if necessary.

Faults

Batteries

WARNING

Risk of injury due to improper handling of batteries!

Wrong handling of batteries poses the risk that the batteries burst or that noxious liquid leaks from the batteries. The liquid may cause skin burns when in contact or severe poisoning if swallowed and can cause blindness when contact with the eyes.

- Never short-circuit the contacts (plus and minus pole) of the battery.
- Never use or store batteries at locations with potentially explosive atmosphere or where high temperatures occur.
- Never try to weld, repair or change batteries in any manner or take it apart or retrofit.
- Always protect battery from unauthorized access.
- To prevent fire, overheating, explosion or leakage of fluid never expose the batteries to severe vibration, high weight bearing or other harmful effects. Leaking and spilled liquid can ignite.
- Avoid contact with spilled liquid.

Measures after contact with battery fluid:

- Wash skin with water and soap after contact.
- Immediately flush out eyes and underneath eye lid for 15 minutes with clear water. When doing so, point mild water jet directly into the eye, do not rub eyes, immediately contact a physician.

Anti-freeze agents

WARNING

Health hazard due to anti-freeze agents!

The coolant of the diesel engine consists of a water anti-freeze agent mixture. Upon body contact, ingestion or inhalation of areosoles, anti-freeze agents can lead to serious health problems.

- Avoid contact with anti-freeze agents.
- Do not eat, drink or smoke when handling anti-freeze agents. Prior to breaks and completion of work, wash hands.
- Wear protective gloves when working with anti-freeze agents.

Measures after contact with anti-freeze agents:

- Wash skin with lots of water after contact.
- Rinse eyes thoroughly with water for at least 15 minutes after contact and consult a physician.
- Rinse out mouth after ingesting and drink lots of water thereafter. Consult a physician.
- After aerosol inhalation go outdoors for fresh air.

Motor oil

WARNING

Risk of injury due to motor oil!

Motor oil contains toxic substances that can trigger inflammation and are carcinogenic.

– Prevent skin contact with motor oil.
– After accidental skin contact, immediately wash your hands with soap. Do not use gasoline, solvent or other chemical cleaners.

Behaviour in the event of faults

The following basic rules apply:

1. In case of faults which represent an immediate risk to personnel or objects of material value, immediately trigger an emergency stop.
2. Determine the cause of the fault.
3. When carrying out fault clearance which requires tasks to be performed in the danger zone, switch off the machine and secure it to prevent it from being switched back on. Inform the responsible party at the location of use of the fault immediately.
4. Depending on the type of fault, have it remedied by authorised qualified personnel or remedy it yourself.

NOTICE

The following fault table provides information on who is authorised to clear the fault.

9.2 Fault table

Fault description	Cause	Remedy	Staff
The diesel engine does not work	Fuel tank empty.	Fill the fuel tank.	Trained persons
	Safety equipment has triggered (fuse, FI circuit breaker).	Check the safety equipment and reactivate or replace as necessary (↳Chapter 9.4 „Changing fuses or circuit breakers", on page 222).	Trained persons
	Starter battery flat.	Charge the starter battery (↳Chapter 7.26 „Charging the main battery", on page 172).	Trained persons
	Emergency stop button pressed.	Unlock the emergency stop button (↳Chapter 3.6 „Safety equipment", on page 28).	Trained persons
The machine does not work with the voltage supply from the construction site supply point	Safety equipment has triggered (fuse, FI circuit breaker).	Check the safety equipment and reactivate or replace as necessary (↳Chapter 9.4 „Changing fuses or circuit breakers", on page 222).	Trained persons
	Extension cable faulty.	Replace the extension cable.	Trained persons
	Incorrect cable cross-section or incorrect cable length.	Adhere to permissible cable length(s) and cable cross-section (↳Chapter 7.2 „Connecting the machine to the mains supply", on page 71).	Trained persons
	Emergency stop button pressed.	Unlock the emergency stop button (↳Chapter 3.6 „Safety equipment", on page 28).	Trained persons
Operation cannot be performed from the lower controller.	Key switch in working basket set to "I"; emergency stop button pressed.	Set key switch in working basket set to "0"; unlock emergency stop button (↳Chapter 3.6 „Safety equipment", on page 28).	Trained persons
The platform function cannot be operated from the working basket	Key switch in working basket set to "0".	Set key switch in working basket to "I".	Trained persons
	Emergency stop button pressed.	Unlock the emergency stop button (↳Chapter 3.6 „Safety equipment", on page 28).	Trained persons
	Bracing not correct.	Brace the machine correctly (↳Chapter 7.10 „Operating the bracing", on page 106).	Trained persons
The crawler tracks cannot be driven.	The switch position on the cable remote control or the control panel is incorrect.	Set the toggle switch to the crawler function position (↳Chapter 7.6 „Driving the machine", on page 87).	Trained persons

Faults

Fault description	Cause	Remedy	Staff
	Safety equipment has triggered (fuse, FI circuit breaker).	Check the safety equipment and reactivate or replace as necessary (↳Chapter 9.4 „Changing fuses or circuit breakers", on page 222).	Trained persons
Bracing not possible	The switch position on the cable remote control or the control panel is incorrect.	Set the toggle switch to "outriggers" (↳Chapter 7.10 „Operating the bracing", on page 106).	Trained persons
	Safety equipment has triggered (fuse, FI circuit breaker).	Check the safety equipment and reactivate or replace as necessary (↳Chapter 9.4 „Changing fuses or circuit breakers", on page 222).	Trained persons
The platform function does not work	The switch position on the cable remote control or the control panel is incorrect.	Set the toggle switch to "platform" (↳Chapter 7.13 „Operating the platform assembly", on page 116).	Trained persons
	Emergency stop button pressed.	Unlock the emergency stop button (↳Chapter 3.6 „Safety equipment", on page 28).	Trained persons
	Bracing not correct.	Check the bracing (↳Chapter 7.10 „Operating the bracing", on page 106).	Trained persons
	There is no supply voltage or it is too low.	Check the voltage supply	Qualified electrician
	Safety equipment has triggered (fuse, FI circuit breaker).	Check the safety equipment and reactivate or replace as necessary (↳Chapter 9.4 „Changing fuses or circuit breakers", on page 222).	Trained persons
The upper boom cannot be extended.	The upper boom is in the transport support.	Lift upper boom out of the transport support (↳Chapter 7.13 „Operating the platform assembly", on page 116).	Trained persons
	Safety equipment has triggered (fuse, FI circuit breaker).	Check the safety equipment and reactivate or replace as necessary (↳Chapter 9.4 „Changing fuses or circuit breakers", on page 222).	Trained persons
Pivoting is not possible	The upper and lower booms are still in the transport supports.	Raise the lower boom out of the transport support (↳Chapter 7.13 „Operating the platform assembly", on page 116).	Trained persons

Fault description	Cause	Remedy	Staff
	Safety equipment has triggered (fuse, FI circuit breaker).	Check the safety equipment and reactivate or replace as necessary (↳Chapter 9.4 „Changing fuses or circuit breakers", on page 222).	Trained persons
The green light on the control panel flashes	Bracing not correct.	Check the bracing; move the machine into work position.	Trained persons
The red lamp on the control panel lights up constantly	The operating lever has been shifted during the start-up process.	Press the emergency stop button and unlock it again. Restart the controller.	Trained persons
	System fault	Call service.	Trained persons
The red lamp on the control panel flashes	Basket titled beyond ± 5°.	Align the basket using the valves (emergency operation) (↳Chapter 7.20 „Emergency operation", on page 140).	Trained persons
The red and green lamps do not light up at all	Safety equipment has triggered (fuse, FI circuit breaker).	Check the safety equipment and reactivate or replace as necessary (↳Chapter 9.4 „Changing fuses or circuit breakers", on page 222).	Trained persons
Motor pump runs and stalls	The hydraulic hose is bent	Check the hydraulic hoses.	Qualified personnel
	Pressure filter soiled.	Change the filter insert (↳Chapter 8 „Maintenance", on page 179).	Qualified personnel
Motor pump is running but there is no pressure in the system	The hand wheel on the hand pump has come loose.	Close hand wheel clockwise.	Trained persons
Cylinder lowers by itself	Hydraulic system faulty.	Shut down machine immediately and call the service department.	Trained persons
Loud motor pump noise and movements slow down and then stop	Too little hydraulic oil in the tank, hydraulic system leaking.	Check the hydraulic oil level and top up if necessary (↳Chapter 8 „Maintenance", on page 179). Call service.	Trained persons
The socket in the working basket has no voltage	The mains power supply has been interrupted.	Check the mains power supply.	Qualified electrician
	Plug not in the socket.	Plug in the plug (↳Chapter 7.2 „Connecting the machine to the mains supply", on page 71).	Trained persons
	Safety equipment has triggered.	Check the fuses (↳Chapter 9.4 „Changing fuses or circuit breakers", on page 222).	Trained persons

Fault description	Cause	Remedy	Staff
Substantial wear on the crawler track	Drive ring severely worn.	Call service.	Trained persons
Steel wires on the crawler tracks broken	Excessive tension on the crawler tracks due to trapped stones, abrupt swerving on a rough surface, faulty spring set, frozen material between the rollers.	Call service.	Trained persons

9.3 Error code list

Faults and error codes are displayed on the display in the control box.

NOTICE

With some messages CM or CS may appear additionally. This refers to the specific card which has triggered the fault message.

- CM – **C**AN **M**ASTER (Master Card) (Card in control box)
- CS – **C**AN **S**LAVE (Slave Card) (Card on the inside of the control box door)

Code	Description
1	Software error / hardware error.
2	Software error / hardware error.
3	Software error / hardware error.
4	Microprocessor hardware fault.
5	Check the inputs for ground pressure for outrigger 1.
6	Check the inputs for ground pressure for outrigger 2.
7	Check the inputs for ground pressure for outrigger 3.
8	Check the inputs for ground pressure for outrigger 4.
9	Check inputs for the "Braced wide" position switch, outrigger 1.
10	Check inputs for the "Braced wide" position switch, outrigger 2.
11	Check inputs for the "Braced wide" position switch, outrigger 3.
12	Check inputs for the "Braced wide" position switch, outrigger 4.
13	Check safety relay 1, monitoring contact.
14	Check safety relay 2, monitoring contact.
15	Check safety relay 3, monitoring contact.
16	Check safety relay 4, monitoring contact.
17	Check inputs for the "Telescopic boom placed" position switch.
18	No position switches for outrigger height should be pressed if during the switch on of the control it is detected that outriggers are not locked.
19	Joystick 1 on the cable remote control was moved during start-up or is faulty.
20	Joystick 2 on the cable remote control was moved during start-up or is faulty.
21	The joysticks on control panel were moved during start-up or are faulty (release contact).
22	The joysticks on the cable remote control were moved during start-up or are faulty (release contact).
23	Joystick 1 on the control panel was moved during start-up or is faulty.
24	Joystick 2 on the control panel was moved during start-up or is faulty.
25	Joystick 3 on the control panel was moved during start-up or is faulty.
26	Joystick 4 on the control panel was moved during start-up or is faulty.
27	Button 1 of the cable remote control was either pressed or is defective.
28	Button 2 of the cable remote control was either pressed or is defective.
29	Button 3 of the cable remote control was either pressed or is defective.
30	Button 4 of the cable remote control was either pressed or is defective.
31	The toggle switch to activate the basket rotation movement on the cable remote control was pressed or is defective.
32	The toggle switch to activate the movement on the cable remote control was pressed or is defective.
33	The toggle switch to activate the automatic bracing on the cable remote control was pressed or is defective.
34	One of the toggle switches for setting the basket level has been actuated or is faulty.
35	Voltage was applied on the output side when switching on the machine or an output driver is faulty.
36	The voltage of the back-up battery is more than 4 V. Replace the battery or there is a hardware fault on the controller.
37	The supply voltage has dropped below 17 V.
38	The supply voltage has exceeded 32 V.
39	The measured angle must not exceed a certain value whilst the telescopic boom is applied. The position switch might be stuck in the bracket.
40	The "Chassis release" relay must be checked.

Faults

Code	Description
41	The machine has been pivoted too far with narrow bracing or the resolver transducer is faulty.
42	The machine has been pivoted too far with single-sided wide bracing or the resolver transducer is faulty.
43	The machine has been pivoted too far with wide bracing or the resolver transducer is faulty.
44	The maximum swivel range has been exceeded or the resolver transducer is faulty.
45	Pivot angle verification error. Check the resolver transducer or calibrate the angle sensors.
46	Check the position of the angle sensors. It may be necessary to reset to zero or reset.
47	The telescopic boom is set too wide or the resolver transducer is faulty.
48	Check the pressure sensors.
49	Check the pressure sensor to make sure the values are reliable.
50	The pressure measured is too low for this situation. The telescopic boom is braced or the pressure sensor is faulty.
51	The "Telescope boom telescoped in" position switch is defective.
52	Software error / hardware error.
53	Software error / hardware error.
54	Hardware error SPI- Real Time Clock.
55	The machine has not been switched off for several days and needs to be restarted.
56	The input information for the safety functions between the master and slave is different.
57	The input information for the safety functions between the master and slave is different.
58	The input information for the safety functions between the master and slave is different.
59	The input information for the safety functions between the master and slave is different.
60	Check safety relay 1 monitoring contact.
61	Check safety relay 2 monitoring contact.
62	Check safety relay 3 monitoring contact.
63	Check safety relay 4 monitoring contact.
64	The telescopic boom was set too wide or the resolver transducer is defective.
65	The load curve has been saved incorrectly. Check the load curves and save them again.
66	The load curve deviates too far from the base curve. Check the load curves and save them again.
67	The values of the load curve are faulty. Check the load curves and save them again.
68	The angle values in the load curve do not match the specifications. Check the load curves and save them again.
69	The number of outrigger positions does not match the specifications. Check the load curves and save them again.
70	Error when checking the load curve. Check the load curves and save them again.
71	Error when calculating the load limit. Check the load curves and angle sensors on the telescopic boom.
72	Max. current of basket scale exceeded, check basket scale.
73	Max. current of basket scale below target, check basket scale.
74	The valid measuring range for the basket scale has been exceeded. Check the basket scale.
75	The basket scale supplies different values. Check the basket scale.
76	Software error.
77	Calibration values from the outputs faulty. Check the values or load the factory settings.
78	Software error / hardware error.
79	Software error / hardware error.
80	Joystick values faulty. Check the joysticks and their parametrisation.
81	Joystick values of radio remote control faulty. Check the radio remote control.

Code	Description
82	Calibration values of the joysticks faulty. Check the values or load the factory settings.
83	Second controller not accessible via the internal CAN bus. Check CAN connection and second control.
84	The second controller had already been started whilst this controller was being started up. Check voltage supply and CAN bus.
85	Check the internal CAN bus.
86	Check the internal CAN bus.
87	Check the internal CAN bus.
88	Software error.
89	Check the internal CAN bus.
90	Check external CAN open bus.
91	Check external CAN open bus.
92	Check external CAN open bus.
93	Check external CAN open bus.
94	Check radio transmitter and radio receiver/Check external CAN open bus.
95	Check radio transmitter and radio receiver/Check external CAN open bus.
96	The offset value has exceeded the permitted range. Check and re-calibrate the resolver transducer.
97	Error when reading in angle sensors on telescopic arm. Check the resolver transducers and supply line.
98	Error reading in resolver transducers. Check the resolver transducers and supply line.
99	Error reading in pivot angle sensors. Check the resolver transducers and supply line.
100	Calibration values of the resolver transducers faulty, check values and calibrate resolver transducers again.
101	Software error / hardware error.
102	EEPROM memory content faulty. Carry out calibration functions.
103	Software error / hardware error.
104	Software error / hardware error.
105	Software error / hardware error.
106	RAM content faulty. Re-start the machine or delete the RAM lists.
107	Software error / hardware error.
108	Software error / hardware error.
109	Software error / hardware error.
110	Software error / hardware error.
111	Software error / hardware error.
112	Software error / hardware error.
113	Software error / hardware error.
114	Software error / hardware error.
115	Software error / hardware error.
116	Software error / hardware error.
117	Software error / hardware error.
118	The bracing angle is within an illegal range or the tilt sensor is faulty.
119	A fault has been detected by another controller. Read out the fault memory on the second controller.
120	Software error / hardware error.
121	The software version has been changed. Change to the correct software version with TODAC.
122	Check inputs for the "Rotate basket, centre position" position switch.
123	Check inputs for the "Lower basket position OK" position switch.

Faults

Code	Description
124	Check inputs for the "Small working height" position switch.
125	The USA enabling button has been actuated whilst starting up the machine or is faulty.
126	Check the inputs of the 'lower boom' position switch.
127	Check the inputs for outrigger locking function for outrigger 1.
128	Check the inputs for outrigger locking function for outrigger 2.
129	Check the inputs for outrigger locking function for outrigger 3.
130	Check the inputs for outrigger locking function for outrigger 4.
131	Lower boom angle verification error. Check the resolver transducer or calibrate the angle sensors.
132	The maximum lower boom angle has been exceeded or the resolver transducer is faulty.
133	Differential angle verification error. Check the resolver transducer or calibrate the angle sensors.
134	The maximum upper boom angle has been exceeded or the resolver transducer is faulty.
135	The offset value has exceeded the permitted range. Check and re-calibrate the resolver transducer for the lower boom.
136	Joystick 3 on the cable remote control was moved during start-up or is faulty.
137	Joystick 4 on the cable remote control was moved during start-up or is faulty.
138	Check tilt sensor for working basket level / Check external CANopen bus.
139	Check tilt sensor for working basket level / Check external CANopen bus.
140	The tilt sensor for the basket level supplies different values. Check the sensor.
141	The maximum tilt angle for the basket level has been exceeded. Check the sensor or the working basket level controller
142	The tilt sensor for the basket level is faulty. Check the sensor.
143	Invalid parameters for activation of the basket level. Perform parametrisation.
144	Software error / hardware error.
145	The rotary angle sensor on the working basket is faulty. Check the sensor and supply line.
146	The minimum upper boom angle has been exceeded or the resolver transducer is faulty.
147	The minimum differential angle has been exceeded or the resolver transducer is faulty.
148	The maximum differential angle has been exceeded or the resolver transducer is faulty.
149	The minimum lower boom angle has been exceeded or the resolver transducer is faulty.
150	The lower boom may only be lowered if the limit switches "lower boom telescoped in" are actuated.
151	The offset value has exceeded the permitted range. Check and re-calibrate the resolver transducer.
152	Check the inputs for the position switch 'upper boom applied'.
153	The measured angle must not exceed a certain value whilst the upper boom is applied. The position switch in the support may be stuck.
154	The offset value has exceeded the permitted range. Check resolver transducer of the upper boom and calibrate again.
155	The position switch for the upper boom telescoped in position is faulty.
156	The switch for activating the home function on the control panel has been actuated or is faulty.
157	Tilt sensor for the basket level has transmitted an invalid measured value. The measured value is outside the measuring range.
158	The differential angle has been exceeded whilst the lower boom was raised or the resolver transducer is faulty.
159	The differential angle has been exceeded whilst the lower boom was raised or the resolver transducer is faulty.
160	Last error entry (number does not appear)
161	The rotary sensor or CAN node on the working basket is faulty.

Code	Description
162	EEPROM memory content faulty. Machine type is not set
163	A length sensor has sent an invalid length value.
164	Length sensor verification error. Check or calibrate length sensor.
165	The maximum speed for raising or lowering the telescopic arm has been exceeded.
166	The maximum speed for swivelling has been exceeded.
167	Joystick 5 on the control panel was moved during start-up or is faulty.
168	The position switch for monitoring the middle position of the working basket or the angle sensor on the working basket is faulty.
169	The switch for activating the special function on the lower controller has been actuated or is faulty.
170	The collision switch on the control panel was actuated during machine start-up or is faulty.
171	Check the CAN node in the chassis / check the external CANopen bus.
172	Check the inputs for the 'lower boom applied' position switch.
173	Check the inputs for the 'lift boom holder erected' position switch.
174	Check the inputs for the 'lift boom holder applied' position switch.
175	Tilt sensors for the bracing angle provide different values. Check the sensors.
176	The foot switch was actuated while starting up the machine or is faulty.
177	The pressure switches or the valve for releasing the brake are faulty.
178	The pressure switches or the valve for releasing the outriggers are faulty.
179	A length sensor on the upper boom has sent an invalid length value. Check the length sensor.
180	Speed sensors for the travel speed provide different values. Check the sensors.
181	The pressure sensors for measuring the floor pressure provide an invalid value. Check the pressure sensors.
182	The current of the pressure sensors has dropped below the minimum level.
183	The maximum travel speed has been exceeded.
184	The upper and lower boom is raised too high while the lift boom holder is not erected.
185	Last fault entry (number does not appear)

Faults

9.4 Changing fuses or circuit breakers

Personnel:

- Specialist staff

Protective equipment:

- Occupational safety clothing
- Safety shoes

DANGER

Risk of fatal injury from electrical power!

Contact with live components can cause fatal injuries. Activated electrical components can perform uncontrolled movements and cause serious injuries.

– Before starting work, switch off the voltage supply and secure it to prevent it from being switched back on.
– When changing fuses or circuit breakers, make sure that the ampere rating is correct.

1. Switch off the machine (↳Chapter 7.3 „Switching the machine on/off", on page 73).
2. Replace the faulty fuse with a new fuse of equal amperage (↳Chapter 9.4.1 „Fuse assignment", on page 223).

NOTICE

The precise fuse ratings are listed in the electrical diagram (↳Chapter 11.1 „Circuit diagram", on page 233) and in the radio control's operating instructions (↳Chapter 11.5 „Radio control", on page 282).

9.4.1 Fuse assignment

Overview of fuses

The fuses are situated in the following positions on the machine:

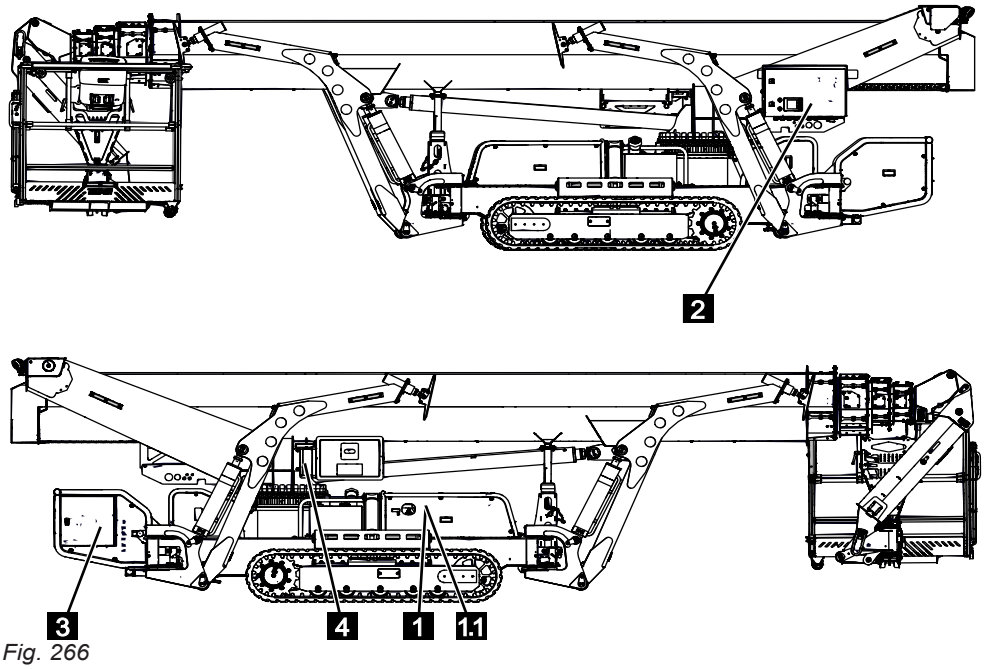

Fig. 266

Position		
1	Control box on combustion engine	Control box, combustion engine
1.1	Control box on LI-ION drive	Control box on LI-ION drive
2	Control box on lift boom holder	(↳Chapter 9.4.1.1 „Control box on lift boom holder", on page 224)
3	Control box on the chassis	(↳Chapter 9.4.1.2 „Control box on the chassis", on page 225)
4	Control box for radio system	(↳Chapter 9.4.1.3 „Control box for radio system", on page 226)

9.4.1.1 Control box on lift boom holder

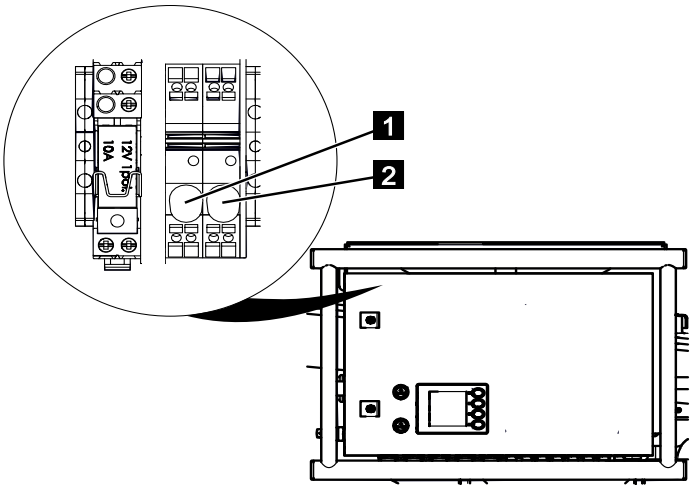

Fig. 267

No.	Description	Assignment
1	Sensors	4 A T
2	Control cards	3.15 A T

9.4.1.2 Control box on the chassis

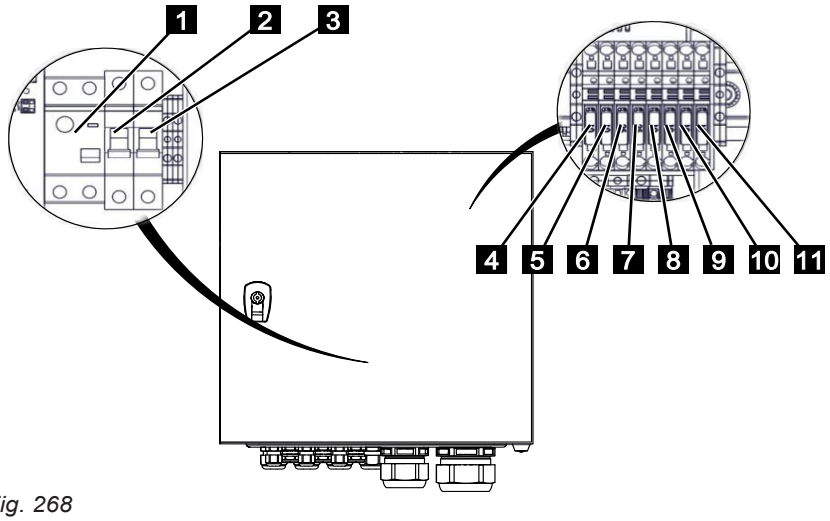

Fig. 268

No.	Description	Assignment
1	Fault interrupt circuit breaker (optional)	See circuit diagram (↳Chapter 11.1 „Circuit diagram", on page 233).
2	Automatic circuit breaker (working basket power socket)	See circuit diagram (↳Chapter 11.1 „Circuit diagram", on page 233).
3	Automatic circuit breaker (mains adapters)	See circuit diagram (↳Chapter 11.1 „Circuit diagram", on page 233).
4	Controls 12 V (motor start)	10 A
5	Back-up pump 12 V	10 A
6	Voltage converter for lighting 12 V (optional)	25 A
7	Voltage converter for controls 12 V	25 A
8	Mains adapter 24 V	10 A
9	Voltage converter 24 V	10 A
10	Mains adapter for lighting 24 V (optional)	5 A
11	Voltage converter for lighting 24 V (optional)	5 A

9.4.1.3 Control box for radio system

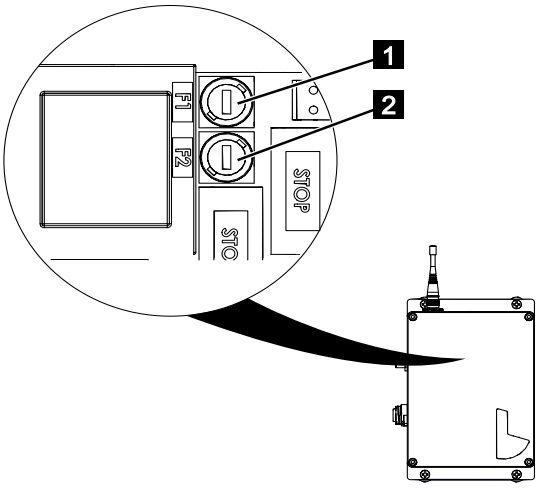

Fig. 269

No.	Description	Assignment
1	Voltage transformer 48V-230V	0.315 A
2	Fuse for emergency stop circuit 10V-30V	6.3 A

9.5 Notes about the crawler track

Damage

During operation, the crawler track is subject to normal wear. Some kinds of damage are explained in the table below.

Damage	Possible cause	Note
Cracks in the profile	■ Hard use in the field. ■ Crossing sharp-edged or high hurdles. ■ On old, not often used chains possibly material fatigue due to bending demand.	No compromise of operation.
Cracks on the outside flanks	■ Hard use in the field. ■ Crossing sharp-edged or high hurdles.	No compromise of operation.
Cracks on the inside by the metal core	■ Various causes.	No compromise of operation.
Wear of the metal core	■ Normal wear from cams of drive gear. ■ Increased wear during use in heavily sandy grounds.	Heed chain tension. The metal core can become bent by great wear. This can cause breaks with progressive wear. Change crawler tracks early.
Wear of the profile	■ Normal appearances ■ Depending on the area of application earlier or later.	Depending on the area of application, the crawler tracks must be replaced appropriately early. Essentially, however, can be moved until there is no more profile.

Remedies

- Brief daily visual inspection.
- Careful moving in swampy ground, especially when slowing down.
- In case of palpable resistance, first determine the cause. Do not move forward with force.
- Use care when driving on impassable and hilly land, especially when slowing down.
- Execute control manoeuvres with appropriate caution.
- Clean crawler chassis after completing work.
- If there is a risk of frost, clean the drive and track inside by driving on clean ground. Then park the machine on wooden boards.

9.6 Information messages

Information messages are displayed on the graphic display screen on the control panel and on the display screen in the control box.

NOTICE

The reference CM or CS indicates the control card that triggered the fault message.

- CM – **C**AN **M**ASTER “master card” (card in control box)
- CS – **C**AN **S**LAVE “slave card” (card on the inside of the control box door)

Control card	Display	Remarks
CM: / CS:	REPLACE 3V BATT	Change the battery.
CM: / CS:	UNDERVOLTAGE 24 V	Check 24 V control voltage.
CM: / CS:	SPI-RAM PROBLEM *	Incorrect memory card: change the back-up battery. Contact service if necessary (see page 2).
CM: / CS:	CLOCK NOT SET	Set the time.
CM: / CS:	OVERVOLTAGE 24 V	Check 24 V control voltage.
CM: / CS:	KG MIN WERT	Check basket scale.
-	LOG RADIO CONTROL	Log in the radio control.

10 Disposal

Electrical current

DANGER

Risk of fatal injury due to electrical current!

Contact with live components can cause fatal injuries. Switched on, electrical components can make uncontrolled movements and lead to severe injuries.

– Before starting work, switch off the voltage supply and secure it to prevent it from being restarted.

WARNING

Risk of injury due to wrong disposal!

Wrong disposal can lead to severe injuries.

– Have disposal done by approved specialist companies.

If no separate return or disposal agreements have been concluded, recycle dismantled components:

- Dispose of all fluids in an environmentally sound manner.
- Scrap all metals.
- Recycle plastic elements.
- Sort and dispose of remaining components in based on their material properties.

Environmental protection

Environmental hazard through improper disposal!

Improper disposal can cause damage to the environment.

– Have electrical and electronic components, lubricants and other auxiliary media disposed of by professionals.

– If in doubt, consult the local authorities or specialist disposal companies as to environmentally sound disposal.

11 Appendix

11.1 Circuit diagram 233
11.2 Hydraulics diagram 235
11.3 Adhesive label folder 237
11.4 Drive units 258
11.4.1 Combustion engine (diesel) 260
11.5 Radio control 282
11.6 RUD lifting accessories 306
11.7 Accessories documentation 310
11.7.1 TEUPEN Operator Protection 312

11.1 Circuit diagram

11.2 Hydraulics diagram

11.3 Adhesive label folder

11.3.1 Crawler chassis

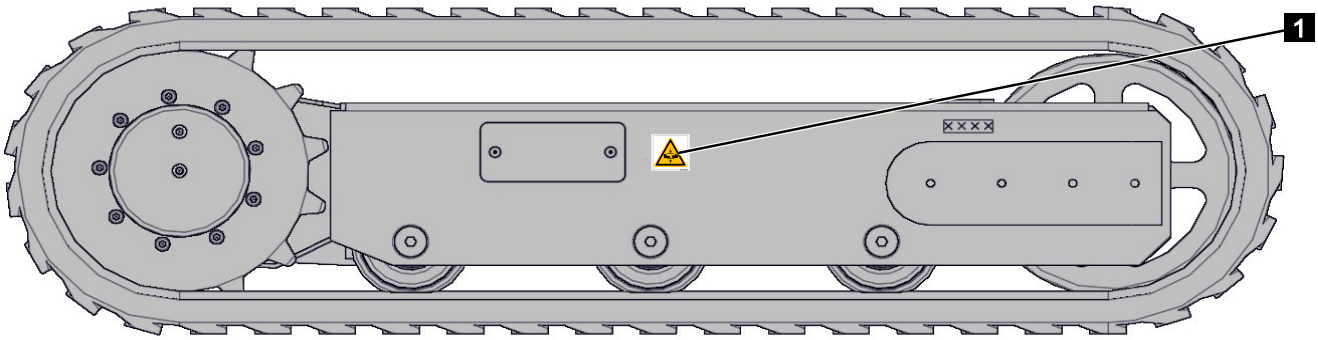

Fig. 270

Item	Language-neutral
1	3914/0021

11.3.2 Bracing

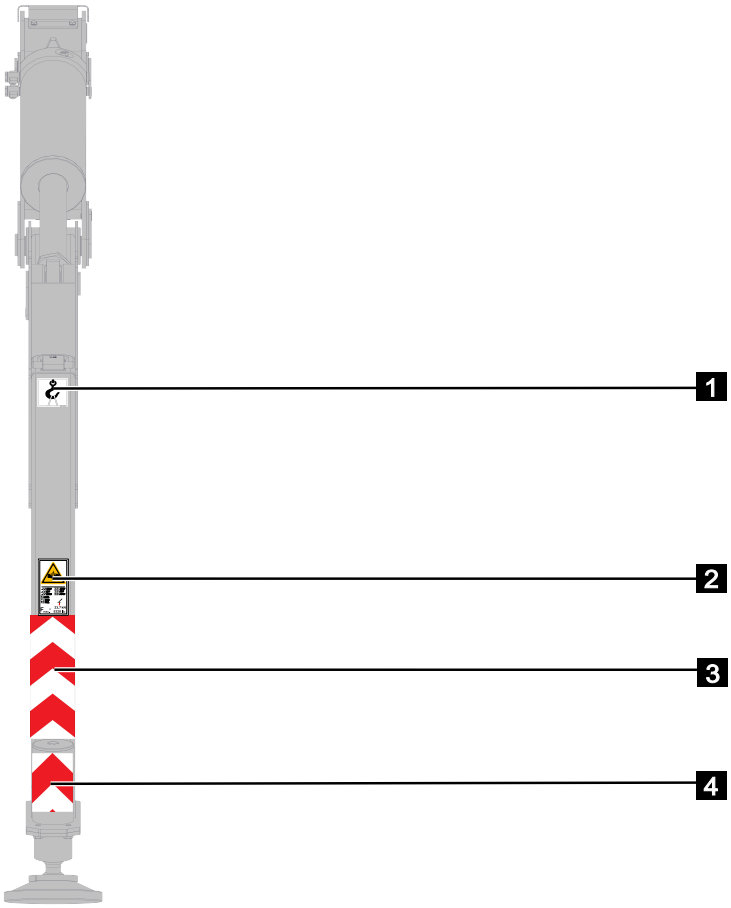

Item	Language-neutral
1	3914/0018
2	LEO/ZEUS21GT, LEO/ZEUS24GT: 3914/0104 LEO/ZEUS19T: 302449 LEO/ZEUS23T: 3914/0104 LEO/ZEUS27T: 302444 LEO/ZEUS31T: 302443 LEO/ZEUS35T: 302445
3	3914/00037
4	300124

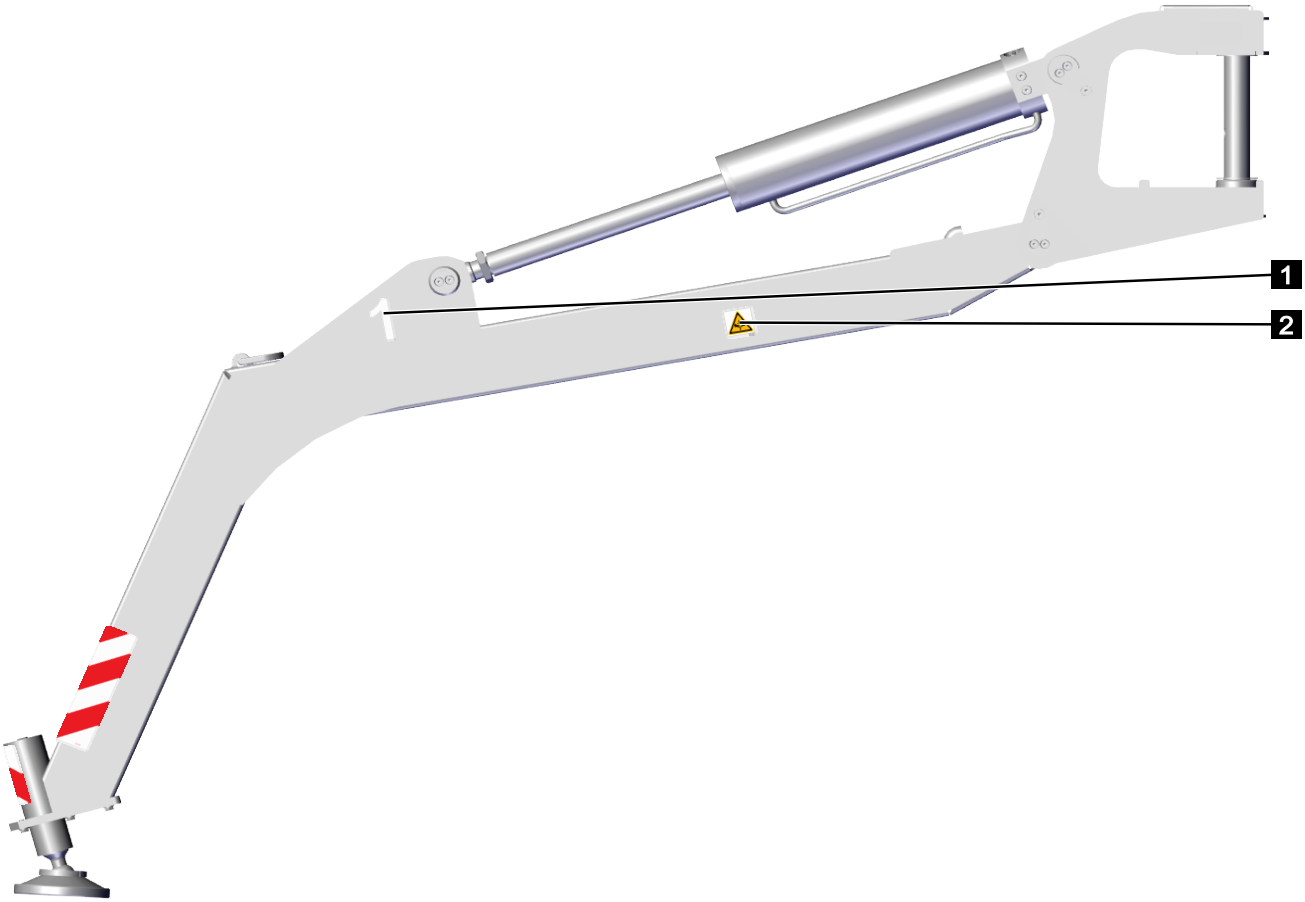
1
2

Appendix

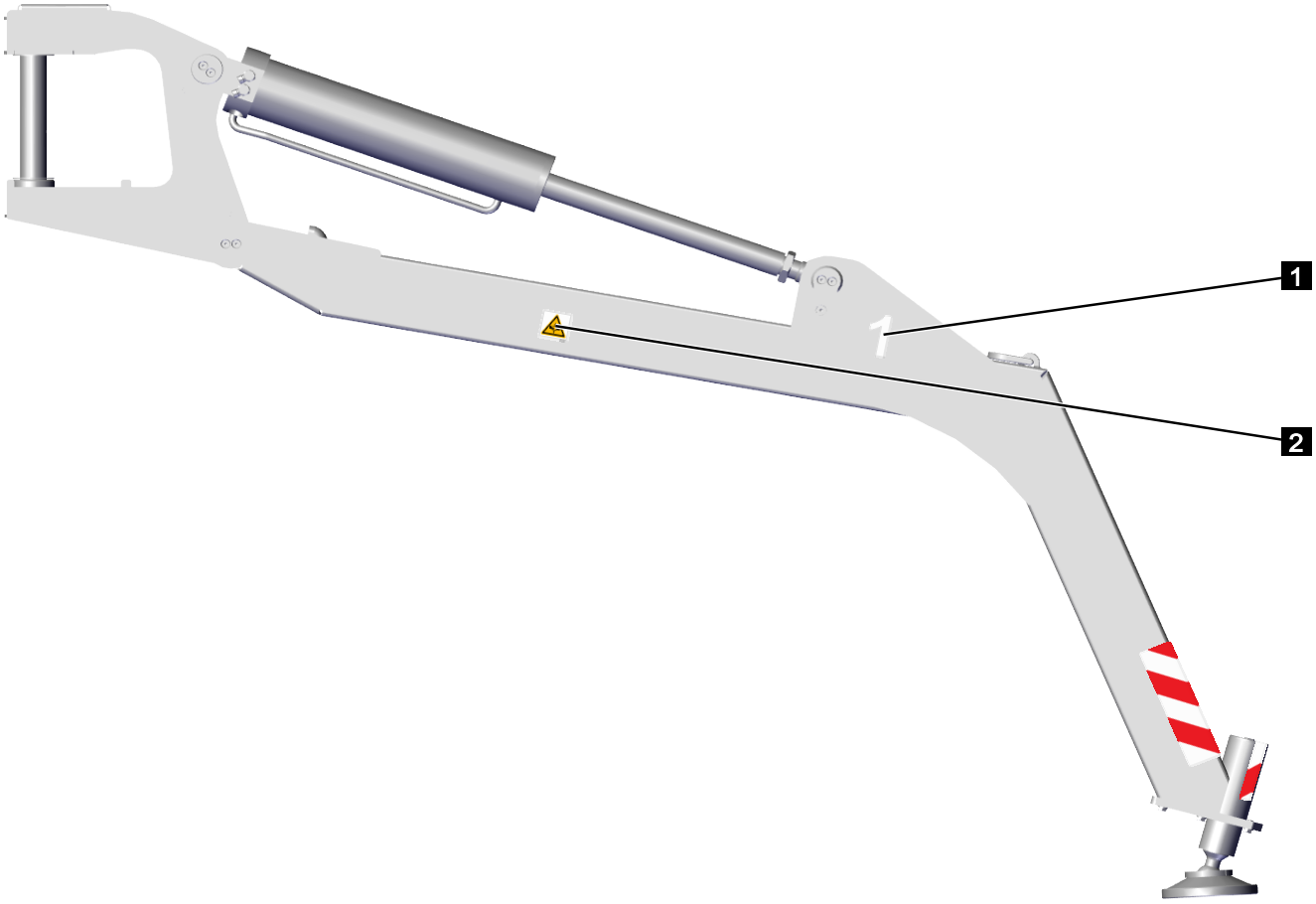

Item	Language-neutral	
1	white no.1 - 3914/0041 no.2 - 3914/0042 no.3 - 3914/0043 no.4 - 3914/0044 black no.1 - 3914/0165 no.2 - 3914/0166 no.3 - 3914/0167 no.4 - 3914/0168	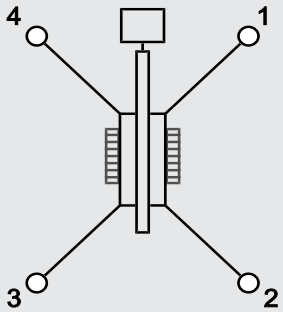
2	3914/0021	

11.3.3 Chassis

LEO 27 T LEO 31 T

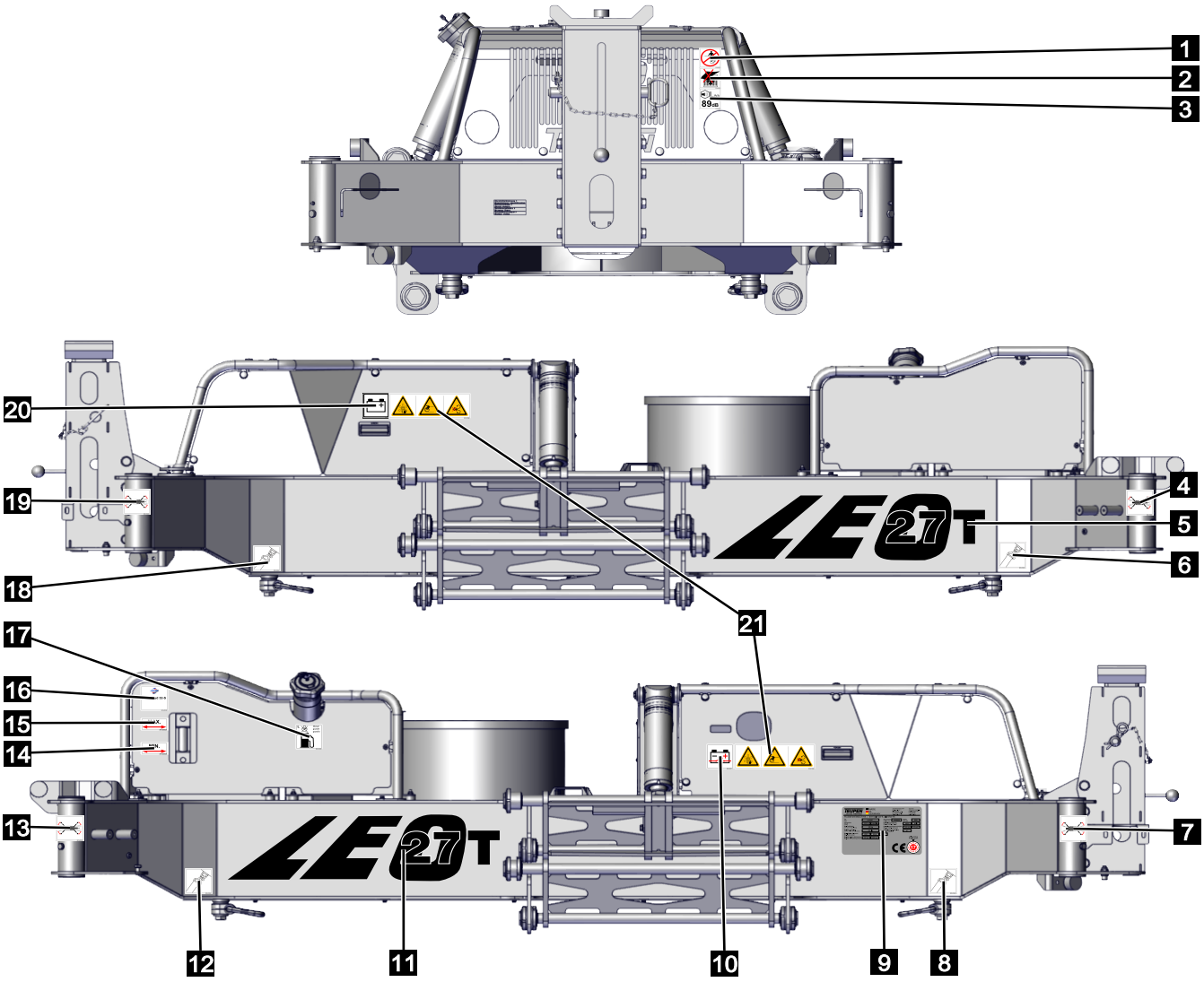

Appendix

Item	Language-neutral
1	3914/0016
2	3914/0049
3	3914/0002
4	3914/0022
5	LEO27T black: 302437 white: 302436 ZEUS27T 302950
	LEO31T black: 302439 white: 302438 ZEUS31T 302951
6	3914/0024
7	3914/0022
8	3914/0024
9	3911/0069
10	3914/0013
11	LEO27T black: 302437 white: 302436 ZEUS27T 302950
	LEO31T black: 302439 white: 302438 ZEUS31T 302951
12	3914/0024
13	3914/0026
14	3914/0025
15	3914/0022
16	Plantohyd: 3914/0020 Panolin: 3914/0263
17	Diesel: 3914/0005 Petrol: 3914/0085
18	3914/0024
19	3914/0022
20	300140
21	3914/0086

11.3.4 Chassis

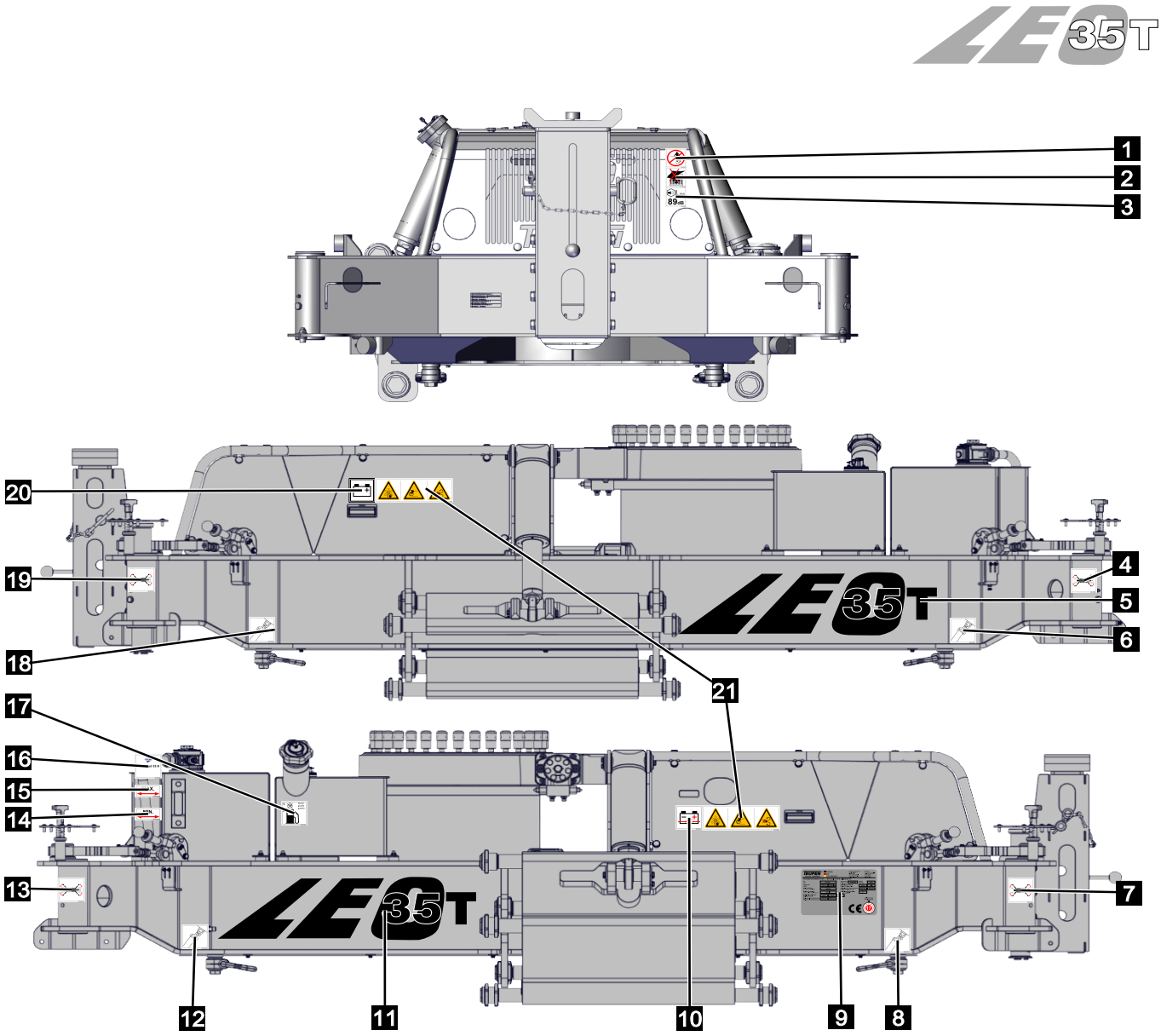

Appendix

Item	Language-neutral
1	3914/0016
2	3914/0049
3	3914/0002
4	3914/0022
5	LEO35T black: 302441 white: 302440 ZEUS35T 302952
6	3914/0024
7	3914/0022
8	3914/0024
9	3911/0069
10	3914/0013
11	LEO35T black: 302441 white: 302440 ZEUS35T 302952
12	3914/0024
13	3914/0026
14	3914/0025
15	3914/0022
16	Plantohyd: 3914/0020 Panolin: 3914/0263
17	Diesel: 3914/0005 Petrol: 3914/0085
18	3914/0024
19	3914/0022
20	300140
21	3914/0086

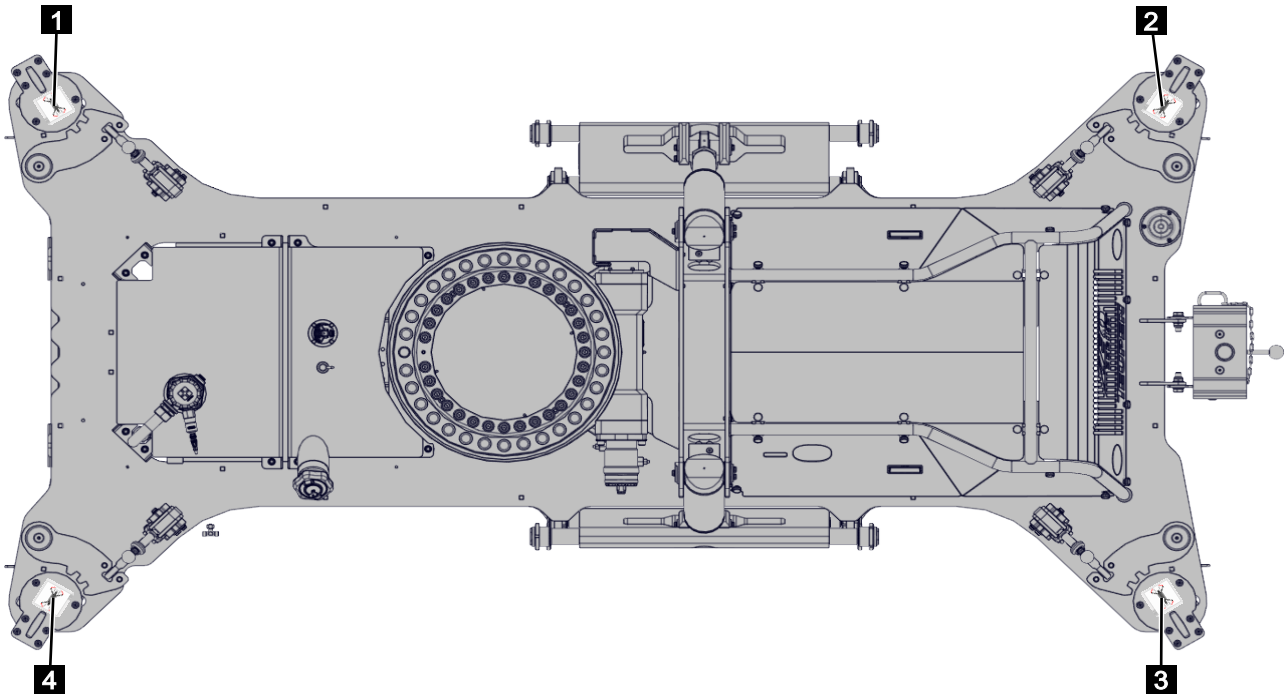

Item	Language-neutral
1	3914/0022
2	3914/0022
3	3914/0022
4	3914/0022

11.3.5 Hydraulic unit

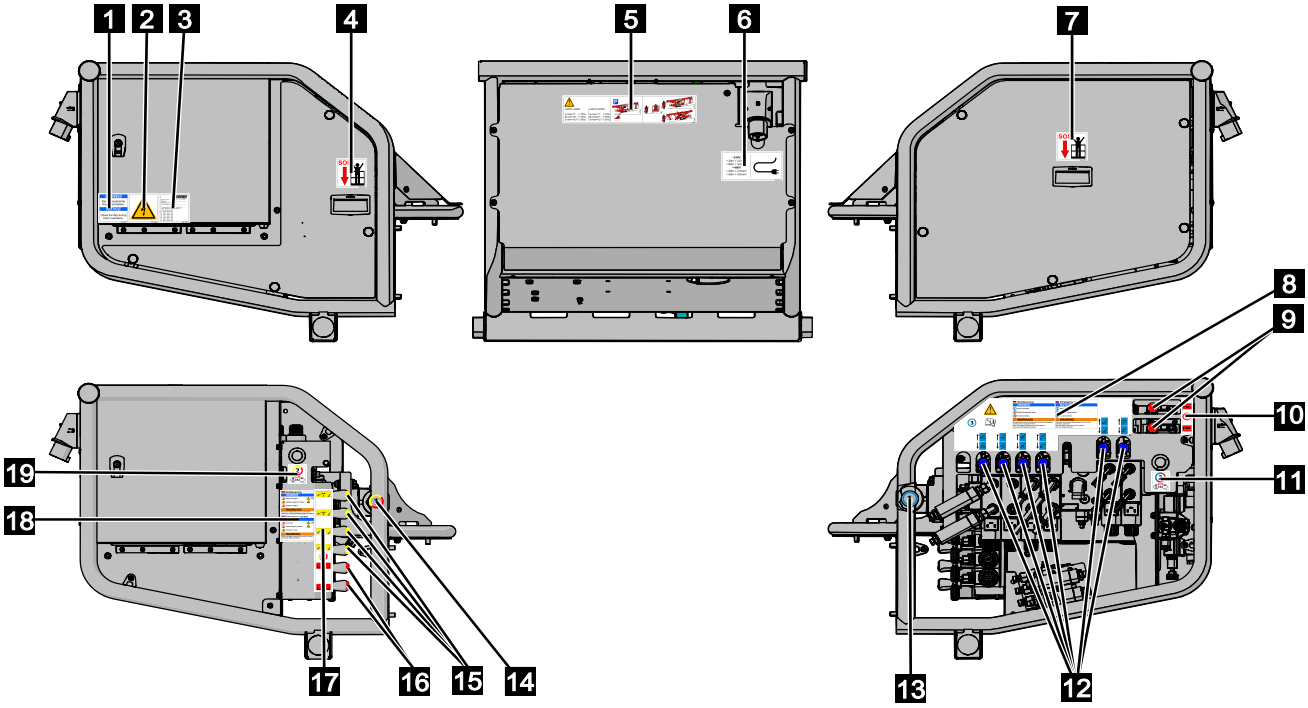

Item	Danish / English	Deutsch / English	Japanese / English	French / Dutch	Norwegian / Swedish	Turkish / English
1	300757	3914/0017	202390	3914/0091	301671	300927
2	3914/0008					
3	3914/0023					
4	3914/0019					
5	LEO19T, LEO23T, LEO27T, LEO31T, LEO35T 302240					
6	3914/0012					
7	3914/0019					
8	302841	302175	xxx	302238	xxx	xxx
9	302470					
10	302181					
11	302178					
12	302464					
13	302179					
14	302180					
15	302465					
16	302470					
17	302182					
18	302840	302176	xxx	302239	xxx	xxx
19	302177					

11.3.6 Lift boom holder

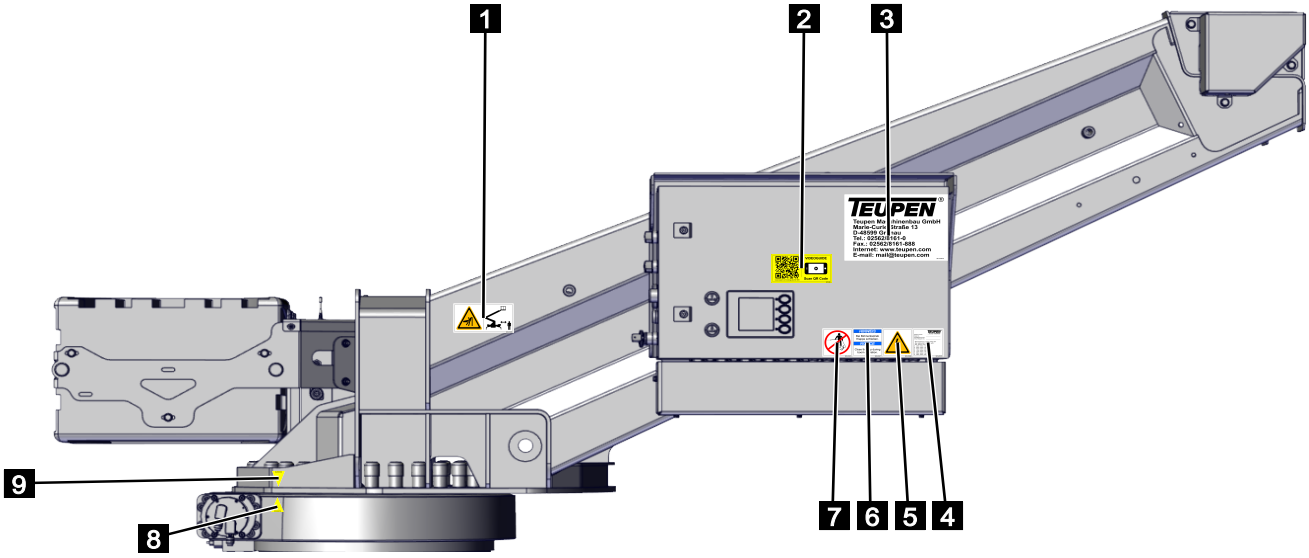

Item	Danish / English	German / English	Japanese / English	French / Dutch	Norwegian / Swedish	Turkish/ English
1	3914/0009					
2	LEO19T, LEO23T: 302549 LEO27T, LEO31T: 302550 LEO35T: 302858					
3	black: 3914/0045 white: 3914/0046					
4	3914/0023					
5	3914/0008					
6	300757	3914/0017	202390	3914/0091	301671	300927
7	3914/0016					
8	3914_0219					
9	3914_0219					

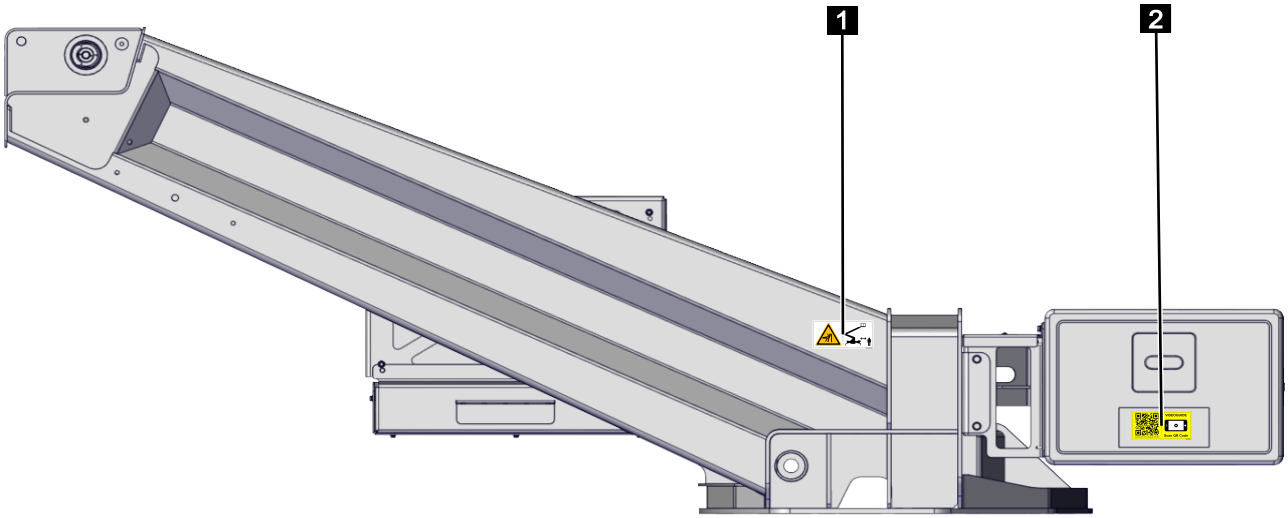

Item	Danish / English	German / English	Japanese / English	French / Dutch	Norwegian / Swedish	Turkish / English
1	3914/0009					
2	LEO19T, LEO23T: 302549 LEO27T, LEO31T: 302550 LEO35T: 302858					

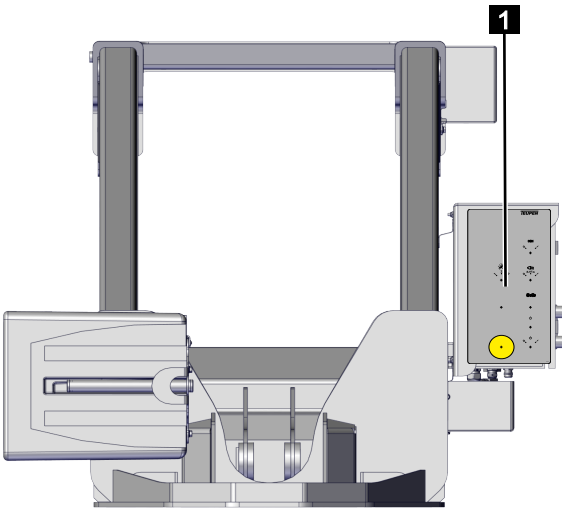

Item	Danish / English	German / English	Japanese / English	French / Dutch	Norwegian / Swedish	Turkish / English
1	301895					

11.3.7 Telescopic boom

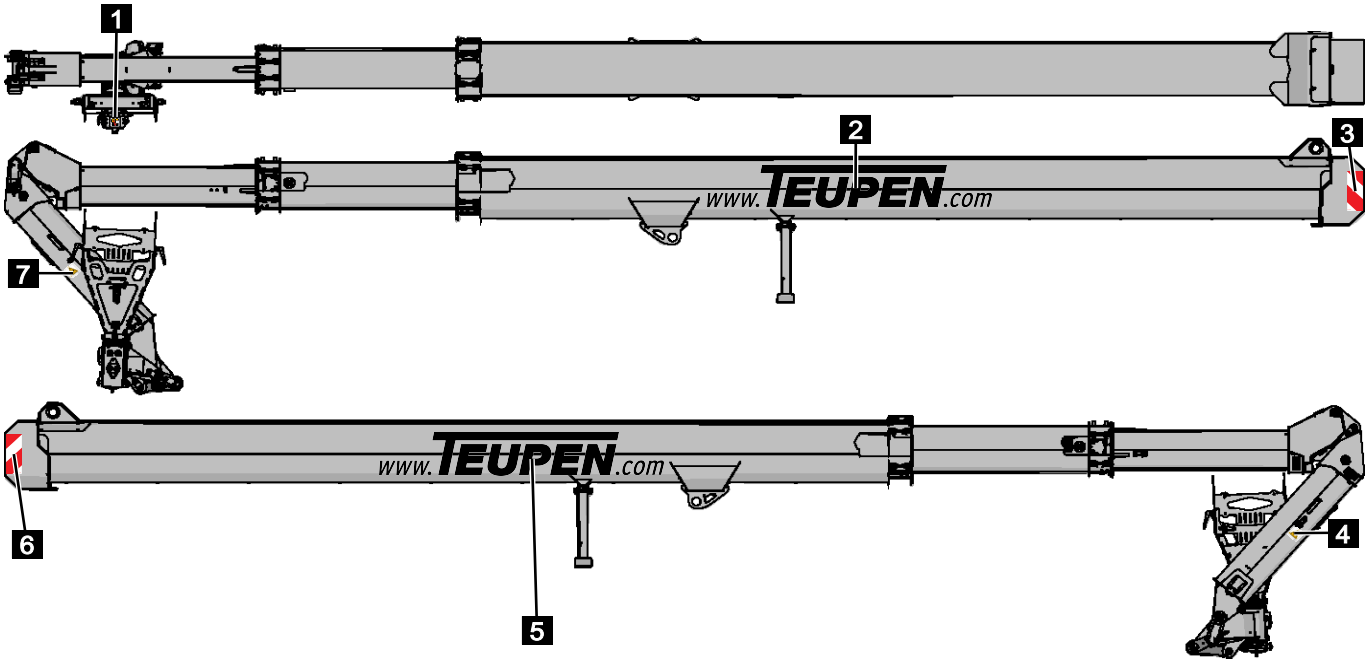

Item	Language-neutral	
1	301991	
2	Teupen white: 3912/0818 black: 3912/0817	ZEUS 302916
3	3914/0038	
4	3914/0021	
5	Teupen white: 3912/0818 black: 3912/0817	ZEUS 302916
6	3914/0038	
7	3914/0021	

11.3.8 Working basket

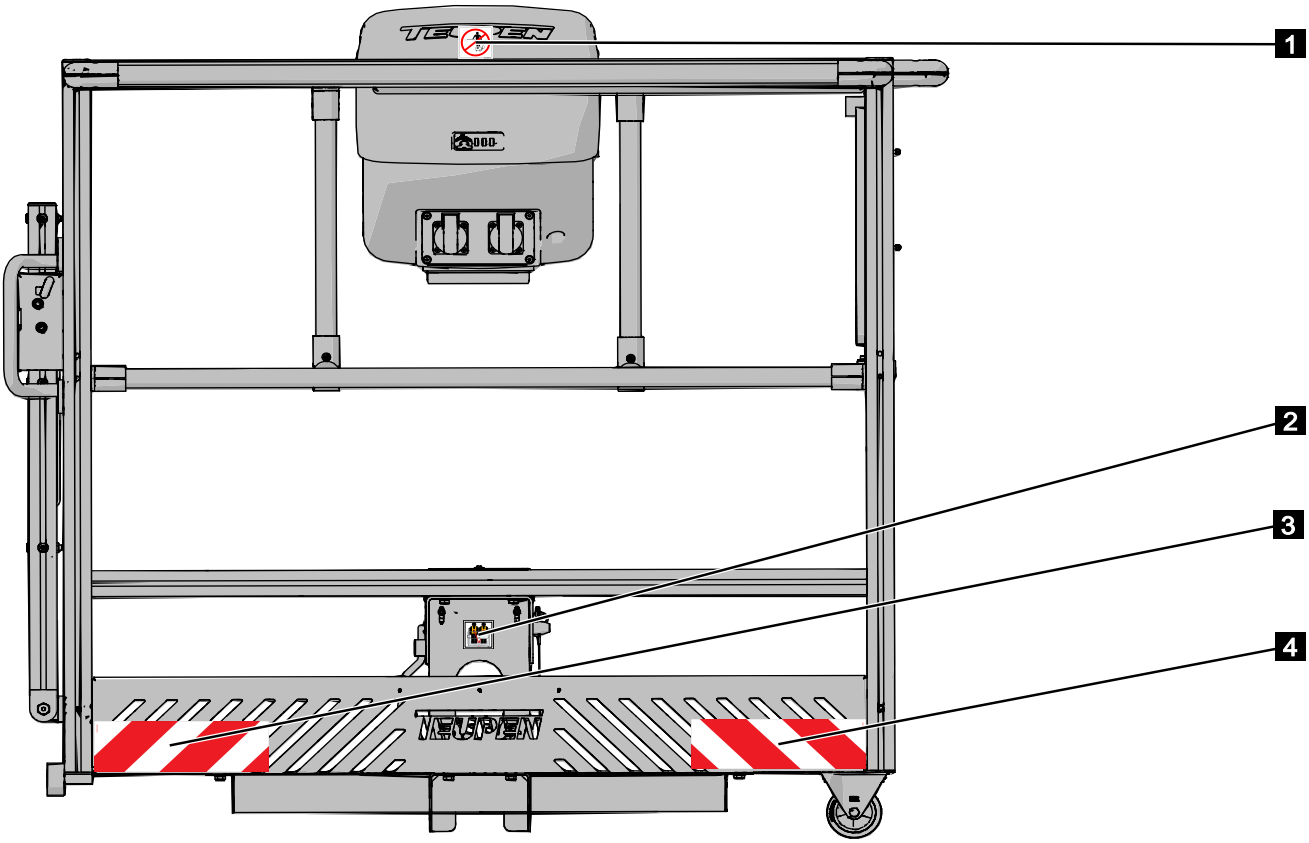

Item	Language-neutral
1	3914/0016
2	301991
3	3914/0053
4	3914/0054

Appendix

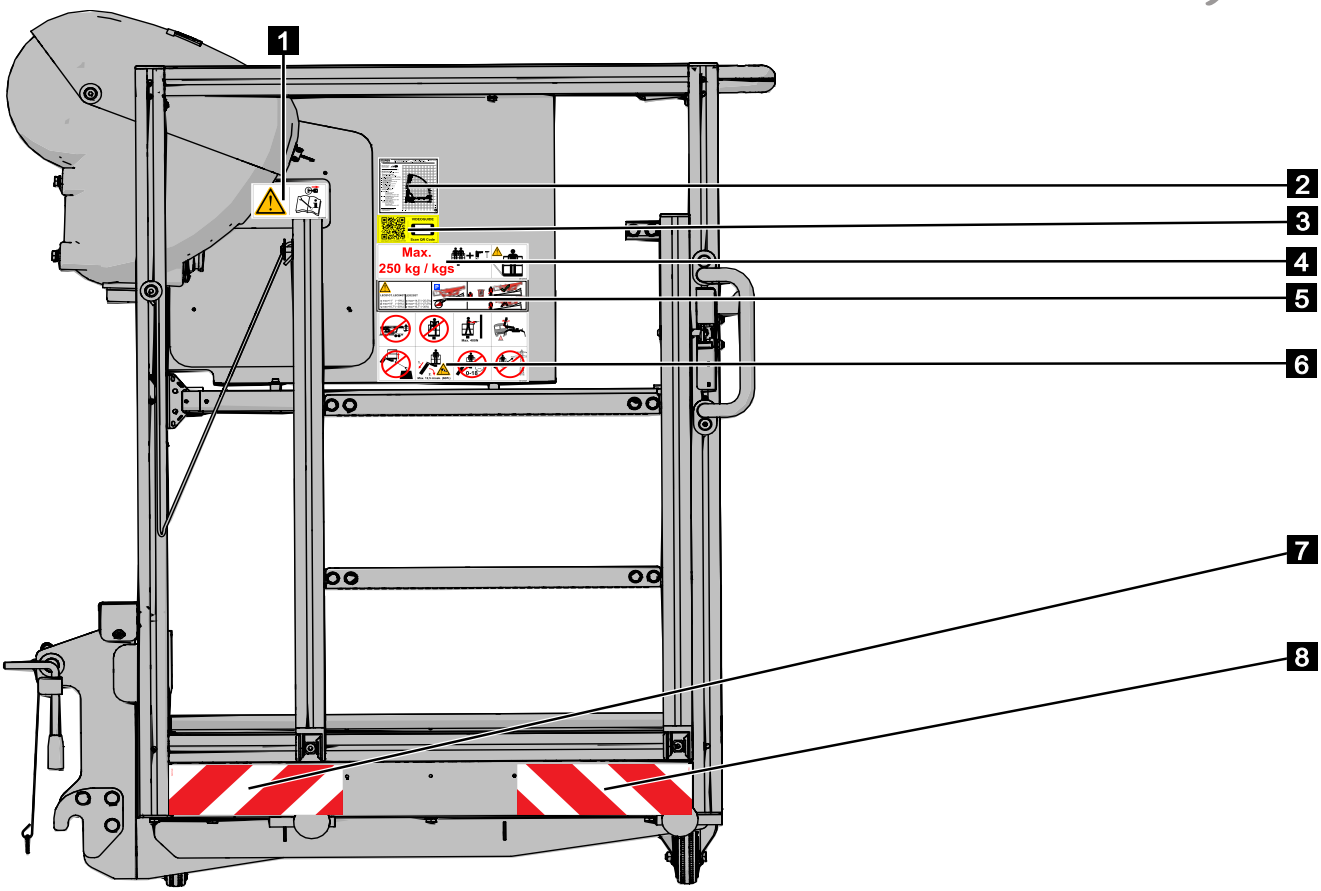

Item	Danish / English	Deutsch / English	Japanese / English	French / Dutch	Norwegian / Swedish	Turkish / English
1	3914/0006					
2		-		LEO19T 302241	-	
		-		LEO23T 302242	-	
		-		LEO27T 302466	-	
		-		LEO31T 302467	-	
		-		LEO35T 302468	-	
3	LEO19T, LEO23T 302549					
	LEO27T, LEO31T 302550					
	LEO35T xxx					
4	3914/0103					
5	302240					
6	3914/0027					
7	3914/0053					
8	3914/0054					

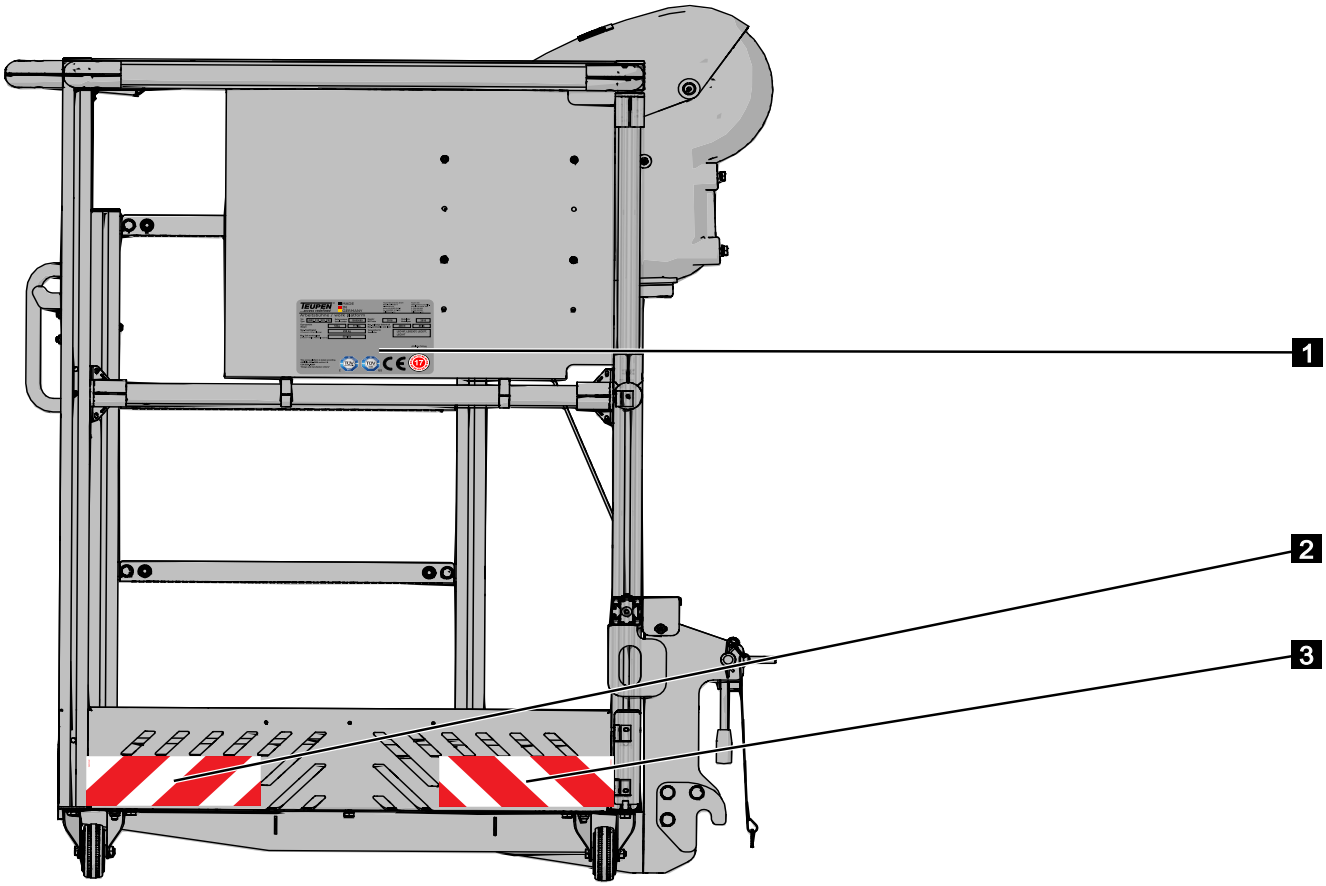

Item	Language-neutral
1	3911/0069
2	3914/0053
3	3914/0054

Appendix

11.4 Drive units

Appendix

11.4.1 Combustion engine (diesel)

Appendix

OPERATOR'S MANUAL

ENGLISH

ENGLISH

KUBOTA
DIESEL ENGINE

MODELS D1005-E3 · D1105-E3
D1105-TE3 · D1305-E3
V1305-E3 · V1505-E3 · V1505-TE3

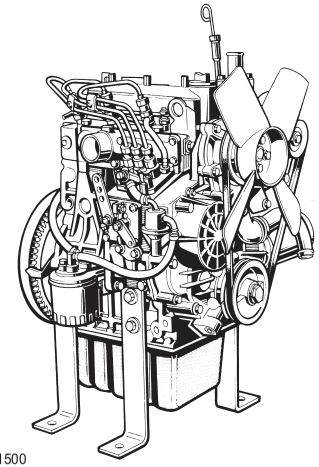

1ABABAAAP1500

1J987-8916-4

READ AND SAVE THIS MANUAL

Kubota

FOREWORD

You are now the proud owner of a KUBOTA Engine. This engine is a product of KUBOTA quality engineering and manufacturing. It is made of fine materials and under a rigid quality control system. It will give you long, satisfactory service. To obtain the best use of your engine, please read this manual carefully. It will help you become familiar with the operation of the engine and contains many helpful hints about engine maintenance. It is KUBOTA's policy to utilize as quickly as possible every advance in our research. The immediate use of new techniques in the manufacture of products may cause some small parts of this manual to be outdated. KUBOTA distributors and dealers will have the most up-to-date information. Please do not hesitate to consult with them.

SAFETY FIRST

This symbol, the industry's "Safety Alert Symbol", is used throughout this manual and on labels on the machine itself to warn of the possibility of personal injury. Read these instructions carefully. It is essential that you read the instructions and safety regulations before you attempt to assemble or use this unit.

DANGER : Indicates an imminently hazardous situation which, if not avoided, will result in death or serious injury.

WARNING : Indicates a potentially hazardous situation which, if not avoided, COULD result in death or serious injury.

CAUTION : Indicates a potentially hazardous situation which, if not avoided, MAY result in minor or moderate injury.

IMPORTANT : Indicates that equipment or property damage could result if instructions are not followed.

NOTE : Gives helpful information.

duma rent
www.duma-rent.com

CONTENTS

⚠SAFE OPERATION 1

SERVICING OF THE ENGINE 1

NAMES OF PARTS 2

PRE-OPERATION CHECK 3
- BREAK-IN 3
- DAILY CHECK 3

OPERATING THE ENGINE 4
- STARTING THE ENGINE(NORMAL) 4
- COLD WEATHER STARTING 5
- STOPPING THE ENGINE 6
- CHECKS DURING OPERATION 6
  - Radiator Cooling water(Coolant) 6
  - Oil pressure lamp 6
  - Fuel 7
  - Color of exhaust 7
  - Immediately stop the engine if; 7
- REVERSED ENGINE REVOLUTION AND REMEDIES 7
  - How to tell when the engine starts running backwards 7
  - Remedies 7

MAINTENANCE 8
- SERVICE INTERVALS 9

PERIODIC SERVICE 12
- FUEL 12
  - Fuel level check and refueling 12
  - Air bleeding the fuel system 13
  - Checking the fuel pipes 13
  - Cleaning the fuel filter pot 14
  - Fuel filter cartridge replacement 14
- ENGINE OIL 15
  - Checking oil level and adding engine oil 15
  - Changing engine oil 16
  - Replacing the oil filter cartridge 16
- RADIATOR 17
  - Checking coolant level, adding coolant 17
  - Changing coolant 18
  - Remedies for quick decrease of coolant 18
  - Checking radiator hoses and clamp 18
  - Precaution at overheating 18
  - Cleaning radiator core(outside) 18
  - Anti-freeze 19
- AIR CLEANER 19
  - Evacuator valve 20
  - For the air cleaner with a dust cup (optional) 20
  - Dust indicator (optional) 20

ENGLISH

ENGLISH

- ELECTRIC WIRING 21
- FAN BELT 21
  - Adjusting Fan Belt Tension 21

CARRIAGE AND STORAGE 22
- CARRIAGE 22
- STORAGE 22

TROUBLESHOOTING 23

SPECIFICATIONS 25

WIRING DIAGRAMS 28

duma rent

www.duma-rent.com

SAFE OPERATION

ENGLISH

Careful operation is your best assurance against an accident. Read and understand this section carefully before operating the engine. All operators, no matter how much experience they may have, should read this and other related manuals before operating the engine or any equipment attached to it. It is the owner's obligation to provide all operators with this information and instruct them on safe operation.

Be sure to observe the following for safe operation.

1. OBSERVE SAFETY INSTRUCTIONS

- Read and understand carefully this "OPERATOR'S MANUAL" and "LABELS ON THE ENGINE" before attempting to start and operate the engine.
- Learn how to operate and work safely. Know your equipment and its limitations. Always keep the engine in good condition.
- Before allowing other people to use your engine, explain how to operate and have them read this manual before operation.
- DO NOT modify the engine. UNAUTHORIZED MODIFICATIONS to the engine may impair the function and/or safety and affect engine life. If the engine does not perform properly, consult your local Kubota Engine Distributor first.

1AAACAAAP008B

2. WEAR SAFE CLOTHING AND PERSONAL PROTECTIVE EQUIPMENT (PPE)

- DO NOT wear loose, torn or bulky clothing around the machine that may catch on working controls and projections or into fans, pulleys and other moving parts causing personal injury.
- Use additional safety items-PPE, e.g. hard hat, safety protection, safety goggles, gloves, etc., as appropriate or required.
- DO NOT operate the machine or any equipment attached to it while under the influence of alcohol, medication, or other drugs, or while fatigued.
- DO NOT wear radio or music headphones while operating the engine.

1AEAAAAAP0130

ENGLISH

3. CHECK BEFORE STARTING & OPERATING THE ENGINE

- Be sure to inspect the engine before operation. Do not operate the engine if there is something wrong with it. Repair it immediately.
- Ensure all guards and shields are in place before operating the engine. Replace any that are damaged or missing.
- Check to see that you and others are a safe distance from the engine before starting.
- Always keep the engine at least 3 feet (1 meter) away from buildings and other facilities.
- DO NOT allow children or livestock to approach the machine while the engine is running.
- DO NOT start the engine by shorting across starter terminals. The machine may start in gear and move. Do not bypass or defeat any safety devices.

1BAABADAP0010

4. KEEP THE ENGINE AND SURROUNDINGS CLEAN

- Be sure to stop the engine before cleaning.
- Keep the engine clean and free of accumulated dirt, grease and trash to avoid a fire. Store flammable fluids in proper containers and cabinets away from sparks and heat.
- Check for and repair leaks immediately.
- DO NOT stop the engine without idling; Allow the engine to cool down, first. Keep the engine idling for about 5 minutes before stopping unless there is a safety problem that requires immediate shut down.

1AEAAAAAP0120

5. SAFE HANDLING OF FUEL AND LUBRICANTS -KEEP AWAY FROM FIRE

- Always stop the engine before refueling and/or lubricating.
- DO NOT smoke or allow flames or sparks in your work area. Fuel is extremely flammable and explosive under certain conditions.
- Refuel at a well ventilated and open place. When fuel and/or lubricants are spilled, refuel after letting the engine cool down.
- DO NOT mix gasoline or alcohol with diesel fuel. The mixture can cause a fire or severe engine damage.
- Do not use unapproved containers e.g. buckets, bottles, jars. Use approved fuel storage containers and dispensers.

1AAACAAAP001A

duma rent
www.duma-rent.com

ENGLISH

6. EXHAUST GASES & FIRE PREVENTION

- Engine exhaust fumes can be very harmful if allowed to accumulate. Be sure to run the engine in a well ventilated location and where there are no people or livestock near the engine.
- The exhaust gas from the muffler is very hot. To prevent a fire, do not expose dry grass, mowed grass, oil or any other combustible materials to exhaust gas. Keep the engine and muffler clean at all times.
- To avoid a fire, be alert for leaks of flammable substances from hoses and lines. Be sure to check for leaks from hoses or pipes, such as fuel and hydraulic fluid by following the maintenance check list.
- To avoid a fire, do not short across power cables and wires. Check to see that all power cables and wirings are in good condition. Keep all electrical connections clean. Bare wire or frayed insulation can cause a dangerous electrical shock and personal injury.

1AAACAAAP011A

7. ESCAPING FLUID

- Relieve all pressure in the air, the oil and the cooling systems before disconnecting any lines, fittings or related items.
- Be cautious of possible pressure relief when disconnecting any device from a pressurized system that utilizes pressure. DO NOT check for pressure leaks with your hand. High pressure oil or fuel can cause personal injury.
- Escaping fluid under pressure has sufficient force to penetrate skin causing serious personal injury.
- Fluid escaping from pinholes may be invisible. Use a piece of cardboard or wood to search for suspected leaks: do not use hands and body. Use safety goggles or other eye protection when checking for leaks.
- If injured by escaping fluid, see a medical doctor immediately. This fluid can produce gangrene or severe allergic reaction.

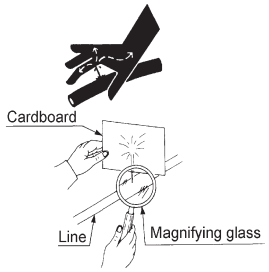

1ABAAAAAP120F

ENGLISH

8. CAUTIONS AGAINST BURNS & BATTERY EXPLOSION

- To avoid burns, be cautious of hot components, e.g. muffler, muffler cover, radiator, hoses, engine body, coolants, engine oil, etc. during operation and after the engine has been shut off.
- DO NOT remove the radiator cap while the engine is running or immediately after stopping. Otherwise hot water will spout out from the radiator. Wait until the radiator is completely cool to the touch before removing the cap. Wear safety goggles.
- Be sure to close the coolant drain valve, secure the pressure cap, and fasten the pipe band before operating. If these parts are taken off, or loosened, it will result in serious personal injury.
- The battery presents an explosive hazard. When the battery is being charged, hydrogen and oxygen gases are extremely explosive.
- DO NOT use or charge the battery if its fluid level is below the LOWER mark.
  Otherwise, the component parts may deteriorate earlier than expected, which may shorten the service life or cause an explosion. Immediately, add distilled water until the fluid level is between the UPPER and LOWER marks.
- Keep sparks and open flames away from the battery, especially during charging. DO NOT strike a match near the battery.
- DO NOT check the battery charge by placing a metal object across the terminals. Use a voltmeter or hydrometer.
- DO NOT charge a frozen battery. There is a risk of explosion. When frozen, warm the battery up to at least 16°C (61°F).

1AEABAAAP0080

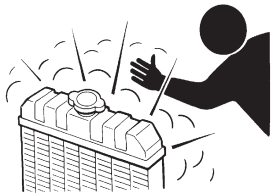

1AAAAABAP0230

1ARAEAAAP0520

9. KEEP HANDS AND BODY AWAY FROM ROTATING PARTS

- Be sure to stop the engine before checking or adjusting the belt tension and cooling fan.
- Keep your hands and body away from rotating parts, such as the cooling fan, V-belt, fan drive pulley or flywheel. Contact with rotating parts can cause severe personal injury.
- DO NOT run the engine without safety guards. Install safety guards securely before operation.

1ABAAAAAP1470

duma rent
www.duma-rent.com

ENGLISH

10. ANTI-FREEZE & DISPOSAL OF FLUIDS

- Anti-freeze contains poison. Wear rubber gloves to avoid personal injury. In case of contact with skin, wash it off immediately.
- DO NOT mix different types of Anti-freeze. The mixture can produce a chemical reaction causing harmful substances. Use approved or genuine KUBOTA Anti-freeze.
- Be mindful of the environment and the ecology. Before draining any fluids, determine the correct way to dispose of them. Observe the relevant environmental protection regulations when disposing of oil, fuel, coolant, brake fluid, filters and batteries.
- When draining fluids from the engine, place a suitable container underneath the engine body.
- DO NOT pour waste onto the ground, down a drain, or into any water source. Dispose of waste fluids according to environmental regulations.

1BJABAAAP0190

1BJABAAAP0180

11. CONDUCTING SAFETY CHECKS & MAINTENANCE

- When inspecting the engine or servicing, place the engine on a large flat surface. DO NOT work on anything that is supported ONLY by lift jacks or a hoist. Always use blocks or the correct stands to support the engine before servicing.
- Disconnect the battery from the engine before conducting service. Put a "DO NOT OPERATE!" tag on the key switch to avoid accidental starting.
- To avoid sparks from an accidental short circuit always disconnect the battery's ground cable (-) first and reconnect it last.
- Be sure to stop the engine and remove the key when conducting daily and periodic maintenance, service and cleaning.
- Check or conduct maintenance after the engine, coolant, muffler, or muffler cover have cooled off completely.
- Always use the appropriate tools and fixtures. Verify that they are in good condition before performing any service work. Make sure you understand how to use them before service.
- Use ONLY correct engine barring techniques for manually rotating the engine. DO NOT attempt to rotate the engine by pulling or prying on the cooling fan and V-belt. This practice can cause serious personal injury or premature damage to the cooling fan and belt.

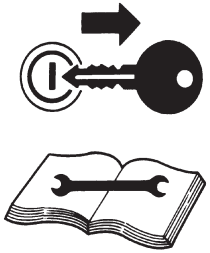
1BJABAAAP0200

ENGLISH

- Replace fuel pipes and lubricant pipes with their hose clamps every 2 years or earlier whether they are damaged or not. They are made of rubber and age gradually.
- When servicing is performed together by two or more persons, take care to perform all work safely.
- Keep a first aid kit and fire extinguisher handy at all times.

12. WARNING AND CAUTION LABELS

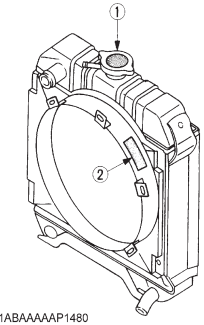

1ABAAAAAP1480

① Part No.19077-8724-1 or 16667-8724-1
(55mm in diameter) (37mm in diameter)

1ABACAAAP036K

② Part No.TA040-4957-1
Stay clear of engine
fan and fan belt

1AGAMAAAP2620

13. CARE OF WARNING AND CAUTION LABELS

1. Keep warning and caution labels clean and free from obstructing material.
2. Clean warning and caution labels with soap and water, dry with a soft cloth.
3. Replace damaged or missing warning and caution labels with new labels from your local KUBOTA dealer.
4. If a component with warning and caution label(s) affixed is replaced with a new part, make sure the new label(s) is (are) attached in the same location(s) as the replaced component.
5. Mount new warning and caution labels by applying to a clean dry surface and pressing any bubbles to the outside edge.

duma rent
www.duma-rent.com

SERVICING OF THE ENGINE

Your dealer is interested in your new engine and has the desire to help you get the most value from it. After reading this manual thoroughly, you will find that you can do some of the regular maintenance yourself.
However, when in need of parts or major service, be sure to see your KUBOTA dealer.
For service, contact the KUBOTA Dealership from which you purchased your engine or your local KUBOTA dealer.
When in need of parts, be prepared to give your dealer the engine serial number.
Locate the serial number now and record them in the space provided.

	Type	Serial No.
Engine		
Date of Purchase		
Name of Dealer		
(To be filled in by purchaser)		

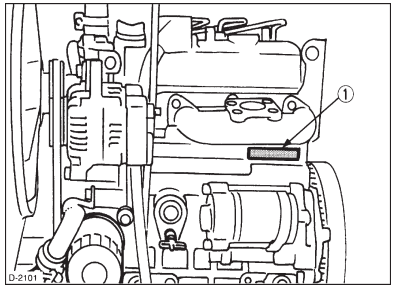

(1) Engine serial number

ENGLISH

ENGLISH

NAMES OF PARTS

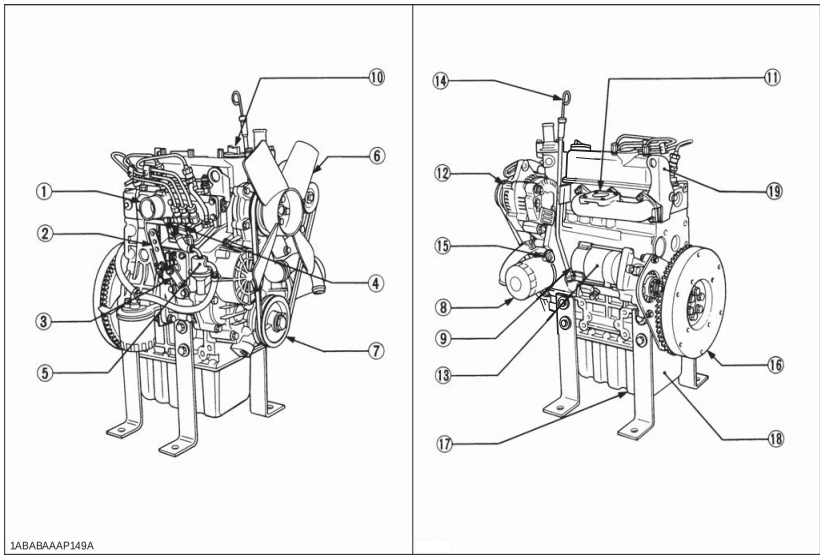

(1) Intake manifold
(2) Speed control lever
(3) Engine stop lever
(4) Injection pump
(5) Fuel feed pump
(6) Cooling fan
(7) Fan drive pulley
(8) Oil filter cartridge
(9) Water drain cock
(10) Oil filler plug
(11) Exhaust manifold
(12) Alternator
(13) Starter
(14) Oil level gauge
(15) Oil pressure switch
(16) Flywheel
(17) Oil drain plug
(18) Oil pan
(19) Engine hook

duma rent
www.duma-rent.com

PRE-OPERATION CHECK

BREAK-IN

During the engine break-in period, observe the following by all means:

1. Change engine oil and oil filter cartridge after the first 50 hours of operation. (See "ENGINE OIL" in "PERIODIC SERVICE" section.)
2. When ambient temperature is low, operate the machine after the engine has been completely warmed up.

DAILY CHECK

To prevent trouble from occurring, it is important to know the conditions of the engine well. Check it before starting.

CAUTION

To avoid personal injury:

- **Be sure to install shields and safeguards attached to the engine when operating.**
- **Stop the engine at a flat and wide space when checking.**
- **Keep dust or fuel away from the battery, wiring, muffler and engine to prevent a fire. Check and clear them before operating everyday. Pay attention to the heat of the exhaust pipe or exhaust gas so that it can not ignite trash.**

Item		Ref. page
1. Parts which had trouble in previous operation		-
2. By walking around the machine	(1) Oil or water leaks	15 to 19
	(2) Engine oil level and contamination	15
	(3) Amount of fuel	12
	(4) Amount of coolant	17
	(5) Dust in air cleaner dust cup	19
	(6) Damaged parts and loosened bolts and nuts	-
3. By inserting the key into the starter switch	(1) Proper functions of meters and pilot lamps; no stains on these parts	-
	(2) Proper function of glow lamp timer	-
4. By starting the engine	(1) Color of exhaust fumes	7
	(2) Unusual engine noise	7
	(3) Engine start-up condition	5
	(4) Slow-down and acceleration behavior	7

ENGLISH

ENGLISH

OPERATING THE ENGINE

STARTING THE ENGINE(NORMAL)

CAUTION

To avoid personal injury:

- **Do not allow children to approach the machine while the engine is running.**
- **Be sure to install the machine on which the engine is installed, on a flat place.**
- **Do not run the engine on gradients.**
- **Do not run the engine in an enclosed area. Exhaust gas can cause air pollution and exhaust gas poisoning.**
- **Keep your hands away from rotating parts (such as fan, pulley, belt, flywheel etc.) during operation.**
- **Do not operate the machine while under the influence of alcohol or drugs.**
- **Do not wear loose, torn or bulky clothing around the machine. It may catch on moving parts or controls, leading to the risk of accident. Use additional safety items, e.g. hard hat, safety boots or shoes, eye and hearing protection, gloves, etc., as appropriate or required.**
- **Do not wear radio or music headphones while operating engine.**
- **Check to see if it is safe around the engine before starting.**
- **Reinstall safeguards and shields securely and clear all maintenance tools when starting the engine after maintenance.**

IMPORTANT :

- Do not use ether or any starting fluid for starting the engine, or a severe damage will occur.
- When starting the engine after a long storage (of more than 3 months), first set the stop lever to the "STOP" position and then activate the starter for about 10 seconds to allow oil to reach every engine part.

1. **Set the fuel lever to the "ON" position.**

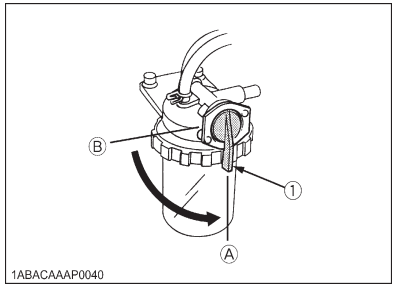

(1) Fuel lever
(A) "ON"
(B) "OFF"

2. **Place the engine stop lever to the "START" position.**
3. **Place the speed control lever at more than half "OPERATION".**

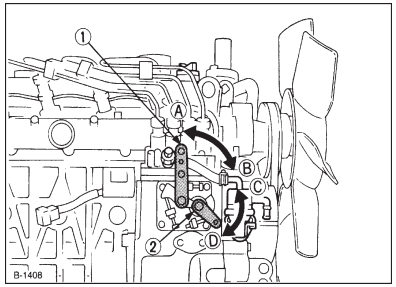

(1) Speed control lever
(2) Engine stop lever
(A) "IDLING"
(B) "OPERATION"
(C) "START"
(D) "STOP"

duma rent
www.duma-rent.com

4. **Insert the key into the key switch and turn it "ON".**

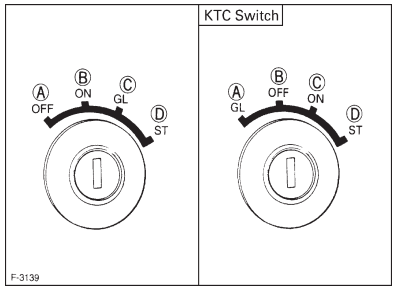

(A) "SWITCHED OFF"
(B) "OPERATION"
(C) "PREHEATING"
(D) "STARTING"

(A) "PREHEATING"
(B) "SWITCHED OFF"
(C) "OPERATION"
(D) "STARTING"

5. **Turn the starter switch to the "PREHEATING" position to allow the glow lamp to redden.**

6. **Turn the key to the "STARTING" position and the engine should start. Release the key immediately when the engine starts.**

7. **Check to see that the oil pressure lamp and charge lamp are off. If the lamps are still on, immediately stop the engine, and determine the cause.**
   (See "CHECKS DURING OPERATION" in "OPERATING THE ENGINE" Section.)

NOTE :
- If the oil pressure lamp should be still on, immediately stop the engine and check;
  - if there is enough engine oil.
  - if the engine oil has dirt in it.
  - if the wiring is faulty.

8. **Warm up the engine at medium speed without load.**

IMPORTANT :
- If the glow lamp should redden too quickly or too slowly, immediately ask your KUBOTA dealer to check and repair it.
- If the engine does not catch or start at 10 seconds after the starter switch is set at "STARTING" position, wait for another 30 seconds and then begin the engine starting sequence again. Do not allow the starter motor to run continuously for more than 20 seconds.

COLD WEATHER STARTING

If the ambient temperature is below -5°C(23°F)* and the engine is very cold, start it in the following manner:
Take steps (1) through (4) left.

5. **Turn the key to the "PREHEATING" position and keep it there for a certain period mentioned below.**

IMPORTANT :
- Shown below are the standard preheating times for various temperatures. This operation, however, is not required, when the engine is warmed up.

Ambient temperature	Preheating time	
	Ordinary heat type	With glow lamp timer
Above 10°C (50°F)	NO NEED	See NOTE:
10°C (50°F) to -5°C (23°F)	Approx. 5 seconds	
*Below -5°C (23°F)	Approx. 10 seconds	
Limit of continuous use	20 seconds	

NOTE :
- In case of installing standard glow lamp, glow lamp goes off after about 6 seconds, when the starter switch key is turned to preheating position. However if necessary, keep the starter switch key at preheating position for longer time, according to the left recommendation.

6. **Turn the key to the "STARTING" position and the engine should start.**
   (If the engine fails to start after 10 seconds, turn off the key for 5 to 30 seconds. Then repeat steps (5) and (6).)

IMPORTANT :
- Do not allow the starter motor to run continuously for more than 20 seconds.
- Be sure to warm up the engine, not only in winter, but also in warmer seasons. An insufficiently warmed-up engine can shorten its service life.
- When there is fear of temperature dropping below -15°C (5°F) detach the battery from the machine, and keep it indoors in a safe area, to be reinstalled just before the next operation.

ENGLISH

ENGLISH

STOPPING THE ENGINE

1. **Return the speed control lever to low idle, and run the engine under idling conditions.**

2. **Set the engine stop lever to the "STOP" position.**

3. **With the starter switch placed to the "OFF" position, remove the key. (Be sure to return the engine stop lever to the "START" position to be ready for the next start.)**

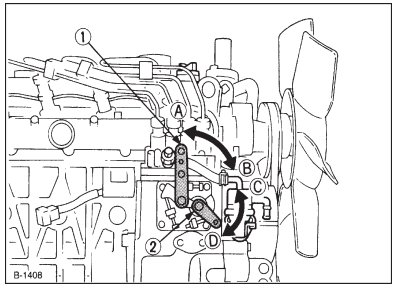

(1) Speed control lever
(2) Engine stop lever

(A) "IDLING"
(B) "OPERATION"
(C) "START"
(D) "STOP"

IMPORTANT :
- If equipped with a turbo-charger, allow the engine to idle for 5 minutes before shutting it off after a full load operation.
  Failure to do so may lead to turbo-charger trouble.

CHECKS DURING OPERATION

While running, make the following checks to see that all parts are working correctly.

■Radiator Cooling water(Coolant)

WARNING

To avoid personal injury:
- **Do not remove radiator cap until coolant temperature is well below its boiling point. Then loosen cap slightly to the stop position, to relieve any pressure, before removing cap completely.**

If the coolant temperature warning lamp lights up or if steam or coolant does not stop squirting from the radiator overflow pipe, turn off the load and **keep the engine idling (COOLING-DOWN) for at least 5 minutes** to let it cool down gradually. Then stop the engine and take the following inspection and servicing.
1. Check to see if the coolant runs short or if there is any coolant leak;
2. Check to see if there is any obstacle around the cooling air inlet or outlet;
3. Check to see if there is any dirt or dust between radiator fins and tube;
4. Check to see if the fan belt is too loose; and
5. Check to see if radiator water pipe is clogged.

■Oil pressure lamp

The lamp lights up to warn the operator that the engine oil pressure has dropped below the prescribed level. If this should happen during operation or should not go off even after the engine is accelerated more than 1000rpm, immediately stop the engine and check the following:
1. Engine oil level (See "ENGINE OIL" in "PERIODIC SERVICE" Section.)

duma rent
www.duma-rent.com

■**Fuel**

CAUTION

To avoid personal injury:

- **Fluid escaping from pinholes may be invisible. Do not use hands to search for suspected leaks; Use a piece of cardboard or wood, instead. If injured by escaping fluid, see a medical doctor at once. This fluid can produce gangrene or a severe allergic reaction.**
- **Check any leaks from fuel pipes or fuel injection pipes. Use eye protection when checking for leaks.**

Be careful not to empty the fuel tank. Otherwise air may enter the fuel system, requiring fuel system bleeding. (See "FUEL" in "PERIODIC SERVICE" Section.)

■**Color of exhaust**

While the engine is run within the rated output range:

- The color of exhaust remains colorless.
- If the output slightly exceeds the rated level, exhaust may become a little colored with the output level kept constant.
- If the engine is run continuously with dark exhaust emission, it may lead to trouble with the engine.

■**Immediately stop the engine if;**

- The engine suddenly slows down or accelerates.
- Unusual noises are suddenly appear.
- Exhaust fumes suddenly become very dark.
- The oil pressure lamp or the water temperature alarm lamp lights up.

REVERSED ENGINE REVOLUTION AND REMEDIES

CAUTION

To avoid personal injury:

- **Reversed engine operation can make the machine reverse and run it backwards. It may lead to serious trouble.**
- **Reversed engine operation may make exhaust gas gush out into the intake side and ignite the air cleaner; It could catch fire.**

Reversed engine revolution must be stopped immediately since engine oil circulation is cut quickly, leading to serious trouble.

■**How to tell when the engine starts running backwards**

1. Lubricating oil pressure drops sharply. Oil pressure warning light, if used, will light.
2. Since the intake and exhaust sides are reversed, the sound of the engine changes, and exhaust gas will come out of the air cleaner.
3. A louder knocking sound will be heard when the engine starts running backwards.

■**Remedies**

1. Immediately set the engine stop lever to the "STOP" position to stop the engine.
2. After stopping the engine, check the air cleaner, intake rubber tube and then other parts and replace parts as needed.

ENGLISH

ENGLISH

MAINTENANCE

CAUTION

To avoid personal injury:

- **Be sure to conduct daily checks, periodic maintenance, refueling or cleaning on a level surface with the engine shut off and remove the key.**
- **Before allowing other people to use your engine, explain how to operate, and have them read this manual before operation.**
- **When cleaning any parts, do not use gasoline but use regular cleanser.**
- **Always use proper tools, that are in good condition. Make sure you understand how to use them, before performing any service work.**
- **When installing, be sure to tighten all bolts lest they should be loose. Tighten the bolts by the specified torque.**
- **Do not put any tools on the battery, or battery terminals may short out. Severe burns or fire could result. Detach the battery from the engine before maintenance.**
- **Do not touch muffler or exhaust pipes while they are hot; Severe burns could result.**

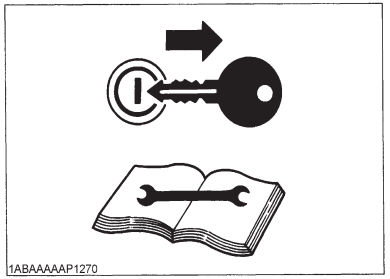

1ABAAAAAP1270

1ABAAAAAP1280

duma rent
www.duma-rent.com

ENGLISH

SERVICE INTERVALS

Observe the following for service and maintenance.

Interval	Item	Ref. page		
Every 50 hours	Check of fuel pipes and clamp bands	13		@
See NOTE	Change of engine oil	15 to 16	◎	
Every 100 hours	Cleaning of air cleaner element	19	*1	@
	Cleaning of fuel filter	14		
	Check of fan belt tightness	21		
	Draining water separator	-		
Every 200 hours	Check of radiator hoses and clamp bands	18		
	Replacement of oil filter cartridge (oil pan depth: 90 mm (3.54 in.))	16	◎	
	Check of intake air line	-		@
Every 400 hours	Replacement of oil filter cartridge (oil pan depth: 125 mm (4.9 in.))	16	◎	@
	Cleaning of water separator	-		
Every 500 hours	Removal of sediment in fuel tank	-		
	Cleaning of water jacket (radiator interior)	17 to 19		
	Replacement of fan belt	21		
Every year	Replacement of air cleaner element	19	*2	@
	Check of damage in electric wiring and loose connections	-		
Every 800 hours	Check of valve clearance	23		
Every 1500 hours	Check of fuel injection nozzle injection pressure	-	*3	@
Every 3000 hours	Check of turbo charger	-	*3	@
	Check of injection pump	-	*3	@
Every two years	Change of radiator coolant (L.L.C.)	18 to 19		
	Replacement of radiator hoses and clamp bands	18		
	Replacement of fuel pipes and clamp bands	13	*3	@
	Replacement of intake air line	-	*4	@

ENGLISH

IMPORTANT :

- The jobs indicated by ◎ must be done after the first 50 hours of operation.

*1 Air cleaner should be cleaned more often in dusty conditions than in normal conditions.
*2 After 6 times of cleaning.
*3 Consult your local KUBOTA Dealer for this service.
*4 Replace only if necessary.

- When the battery is used for less than 100 hours in a year, check its electrolyte yearly. (for refillable battery's only)
- The items listed above (@ marked) are registered as emission related critical parts by KUBOTA in the U.S. EPA nonroad emission regulation. As the engine owner, you are responsible for the performance of the required maintenance on the engine according to the above instruction.
  Please see the Warranty Statement in detail.

NOTE :

- **Changing interval of engine oil**

Models	Oil pan depth	
	Above 125 mm (4.9 in.) (110 mm D1305-E3)	*below 101 mm (4.0 in.)
All models	200 Hrs	150 Hrs
Initial	50 Hrs	

* 101 mm oil pan depth is optional.
**Standard replacement interval

- API service classification: above CF grade
- Ambient temperature: below 35°C (95°F)

NOTE :

Lubricating oil

With strict emission control regulations now in effect, the CF-4 and CG-4 engine oils have been developed for use with low sulfur fuels, for On-Highway vehicle engines. When a Non-Road engine runs on high sulfur fuel, it is advisable to use a "CF or better" classification engine oil with a high Total Base Number (a minimum TBN of 10 is recommended).

- **Lubricating oil recommended when a low-sulfur or high-sulfur fuel is employed.**

○ : Recommendable × : Not recommendable

Lubricating oil classification	**Fuel		Remarks
	Low-sulfur	High-sulfur	
CF	○	○	*TBN≧10
CF-4	○	×	
CG-4	○	×	
CH-4	○	×	
CI-4	○	×	

*TBN: Total Base Number
**Fuel

- Diesel Fuel Specification Type and Sulfur Content % (ppm) used, must be compliant with all applicable emission regulations for the area in which the engine is operated.
- Use of diesel fuel with sulfur content less than 0.10 % (1000 ppm) is strongly recommended.
- If high-sulfur fuel (sulfur content 0.50 % (5000 ppm) to 1.0 % (10000 ppm)) is used as a diesel fuel, change the engine oil and oil filter at shorter intervals. (approximately half).
- DO NOT USE Fuels that have sulfur content greater than 1.0 % (10000 ppm).
- Since KUBOTA diesel engines of less than 56 kW (75 hp) utilize EPA Tier 4 and Interim Tier 4 standards, the use of ultra low sulfur fuel is mandatory for these engines, when operated in US EPA regulated areas. Therefore, please use No.2-D S15 diesel fuel as an alternative to No.2-D, and use No.1-D S15 diesel fuel as an alternative to No.1-D for ambient temperatures below -10°C (14°F).
  No.1-D or No.2-D, S15 : Ultra Low Sulfur Diesel (ULSD) 15 ppm or 0.0015 wt.%

- CJ-4 classification oil is intended for use in engines equipped with DPF (Diesel Particulate Filter) and is Not Recommended for use in Kubota E3 specification engines.

duma rent
www.duma-rent.com

- Oil used in the engine should have API classification and Proper SAE Engine Oil according to the ambient temperatures as shown below:

Above 25°C (77°F)	SAE30, SAE10W-30 or 15W-40
-10 to 25°C (14°F to 77°F)	SAE10W-30 or 15W-40
Below -10°C (14°F)	SAE10W-30

- Recommended API classification
  Refer to the following table for the suitable American Petroleum Institute (API) classification of engine oil according to the engine type (with internal EGR, external EGR or non-EGR) and the Fuel Type Used : (Ultra Low Sulfur or High Sulfur Fuels).

Fuel type	Engine oil classification (API classification)	
	Engines with non-EGR Engines with internal EGR	Engines with external EGR
High Sulfur Fuel [0.05 % (500 ppm) ≤ Sulfur Content < 0.50 % (5000 ppm)]	**CF** (If the "CF-4, CG-4, CH-4 or CI-4" engine oil is used with a high-sulfur fuel, change the engine oil at shorter intervals. (approximately half))	---
Ultra Low Sulfur Fuel [Sulfur Content < 0.0015 % (15 ppm)]	**CF, CF-4, CG-4, CH-4 or CI-4**	**CF or CI-4** (Class CF-4, CG-4 and CH-4 engine, oils cannot be used on EGR type engines.)

EGR: Exhaust Gas Re-circulation

ENGLISH

ENGLISH

PERIODIC SERVICE

FUEL

Fuel is flammable and can be dangerous. You should handle fuel with care.

⚠ CAUTION

To avoid personal injury:

- **Do not mix gasoline or alcohol with diesel fuel. This mixture can cause an explosion.**
- **Be careful not to spill fuel during refueling. If fuel should spill, wipe it off at once, or it may cause a fire.**
- **Do not fail to stop the engine before refueling. Keep the engine away from the fire.**
- **Be sure to stop the engine while refueling or bleeding and when cleaning or changing fuel filter or fuel pipes. Do not smoke when working around the battery or when refueling.**
- **Check the fuel systems at a well ventilated and wide place.**
- **When fuel and lubricant are spilled, refuel after letting the engine cool off.**
- **Always keep spilled fuel and lubricant away from engine.**

■Fuel level check and refueling

1. Check to see that the fuel level is above the lower limit of the fuel level gauge.
2. If the fuel is too low, add fuel to the upper limit. Do not overfill.

Flash Point, °C (°F)	Water and Sediment, volume %	Carbon Residue on, 10 percent Residuum, %	Ash, weight %
Min	Max	Max	Max
52 (125)	0.05	0.35	0.01

Distillation Temperatures, °C(°F) 90% Point		Viscosity Kinematic cSt or mm²/s at 40°C		Viscosity Saybolt, SUS at 37.8°C(100°F)	
Min	Max	Min	Max	Min	Max
282 (540)	338 (640)	1.9	4.1	32.6	40.1

Sulfur, weight %	Copper Strip Corrosion	Cetane Number
Max	Max	Min
0.50	No. 3	40

- Cetane Rating : The minimum recommended Fuel Cetane Rating is 45. A cetane rating greater than 50 is preferred, especially for ambient temperatures below -20 °C (-4 °F) or elevations above 1500 m (5000 ft).
- Diesel Fuel Specification Type and Sulfur Content % (ppm) used, must be compliant with all applicable emission regulations for the area in which the engine is operated.
- Use of diesel fuel with sulfur content less than 0.10 % (1000 ppm) is strongly recommended.
- If high-sulfur fuel (sulfur content 0.50 % (5000 ppm) to 1.0 % (10000 ppm)) is used as a diesel fuel, change the engine oil and oil filter at shorter intervals. (approximately half).
- DO NOT USE Fuels that have sulfur content greater than 1.0 % (10000 ppm).
- Diesel fuels specified to EN 590 or ASTM D975 are recommended.
- No.2-D is a distillate fuel of lower volatility for engines in industrial and heavy mobile service. (SAE J313 JUN87)
- Since KUBOTA diesel engines of less than 56 kW (75 hp) utilize EPA Tier 4 and Interim Tier 4 standards, the use of ultra low sulfur fuel is mandatory for these engines, when operated in US EPA regulated areas. Therefore, please use No.2-D S15 diesel fuel as an alternative to No.2-D, and use No.1-D S15 diesel fuel as an alternative to No.1-D for ambient temperatures below -10 °C (14 °F).
  1) SAE : Society of Automotive Engineers
  2) EN : European Norm
  3) ASTM : American Society of Testing and Materials
  4) US EPA : United States Environmental Protection Agency
  5) No.1-D or No.2-D, S15 : Ultra Low Sulfur Diesel (ULSD) 15 ppm or 0.0015 wt.%

IMPORTANT :

- Be sure to use a strainer when filling the fuel tank, or dirt or sand in the fuel may cause trouble in the fuel injection pump.
- For fuel, always use diesel fuel. You are required not to use alternative fuel, because its quality is unknown or it may be inferior in quality. Kerosene, which is very low in cetane rating, adversely affects the engine. Diesel fuel differs in grades depending on the temperature.
- Be careful not to let the fuel tank become empty, or air can enter the fuel system, necessitating bleeding before next engine start.

duma rent
www.duma-rent.com

■Air bleeding the fuel system

CAUTION

To avoid personal injury;

- **Do not bleed a hot engine as this could cause fuel to spill onto a hot exhaust manifold creating a danger of fire.**

Air bleeding of the fuel system is required if;

- after the fuel filter and pipes have been detached and refitted;
- after the fuel tank has become empty; or
- before the engine is to be used after a long storage.

[PROCEDURE Ⓐ] (gravity feed fuel tanks only)

1. Fill the fuel tank to the fullest extent. Open the fuel filter lever.
2. Loosen air vent plug of the fuel filter a few turns.
3. Screw back the plug when bubbles do not come up any more.
4. Open the air vent plug on top of the fuel injection pump.
5. Retighten the plug when bubbles do not come up any more.

[GRAVITY FEED SYSTEM]

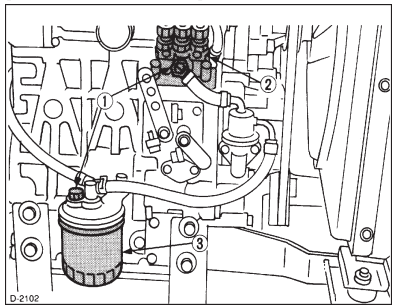

(1) Air vent plug
(2) Injection pump
(3) Fuel filter

[PROCEDURE Ⓑ] (fuel tanks lower than injection pump)

1. For fuel tanks that are lower than the injection pump. The fuel system must be pressurized by the fuel system electric fuel pump.
2. If an electric fuel pump is not used, you must manually actuate the pump by lever to bleed.
3. The primary fuel filter ③ must be on the pressure side of the pump if the fuel tank is lower than the injection pump.
4. To bleed follow (2) through (5) above. (PROCEDURE Ⓐ)

IMPORTANT :

- Tighten air vent plug of the fuel injection pump except when bleeding, or it may stop the engine suddenly.

[TANK BELOW INJECTION PUMP SYSTEM]

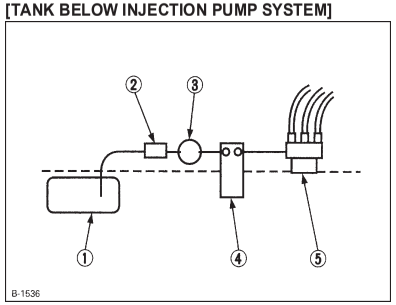

(1) Fuel tank below injection pump
(2) Pre-filter
(3) Electric or Mechanical pump
(4) Main Filter
(5) Injection pump

■Checking the fuel pipes

CAUTION

To avoid personal injury;

- **Check or replace the fuel pipes after stopping the engine. Broken fuel pipes can cause fires.**

Check the fuel pipes every 50 hours of operation. When if;

1. If the clamp band is loose, apply oil to the screw of the band, and tighten the band securely.
2. If the fuel pipes, made of rubber, became worn out, replace them and clamp bands every 2 years.
3. If the fuel pipes and clamp bands are found worn or damaged before 2 years' time, replace or repair them at once.
4. After replacement of the pipes and bands, air-bleed the fuel system.

ENGLISH

ENGLISH

IMPORTANT :

- When the fuel pipes are not installed, plug them at both ends with clean cloth or paper to prevent dirt from entering. Dirt in the pipes can cause fuel injection pump malfunction.

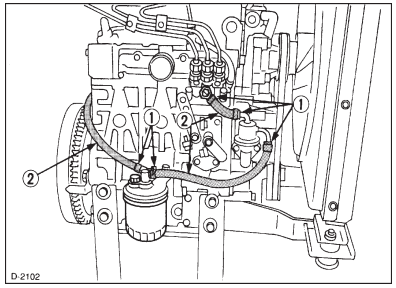

(1) Clamp band
(2) Fuel pipe

■Cleaning the fuel filter pot

Every 100 hours of operation, clean the fuel filter in a clean place to prevent dust intrusion.

1. Close the fuel filter lever.

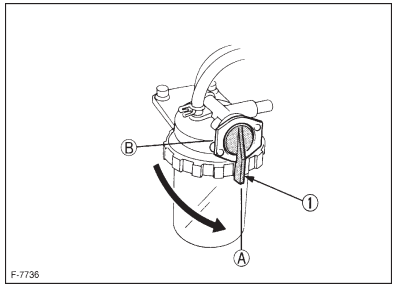

(1) Fuel filter lever
(2) Fuel filter pot
(A) "OFF"
(B) "ON"

2. Remove the top cap, and rinse the inside with diesel fuel.
3. Take out the element, and rinse it with diesel fuel.
4. After cleaning, reinstall the fuel filter, keeping out of dust and dirt.
5. Air-bleed the injection pump.

IMPORTANT :

- Entrance of dust and dirt can cause a malfunction of the fuel injection pump and the injection nozzle. Wash the fuel filter cup periodically.

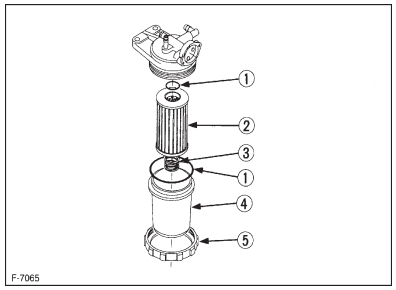

(1) O ring
(2) Filter element
(3) Spring
(4) Filter bowl
(5) Screw ring

■Fuel filter cartridge replacement

1. Replace the fuel filter cartridge with a new one every 400 operating hours.
2. Apply fuel oil thinly over the gasket and tighten the cartridge into position by hand-tightening only.
3. Finally, vent the air.

IMPORTANT :

- Replace the fuel filter cartridge periodically to prevent wear of the fuel injection pump plunger or the injection nozzle, due to dirt in the fuel.

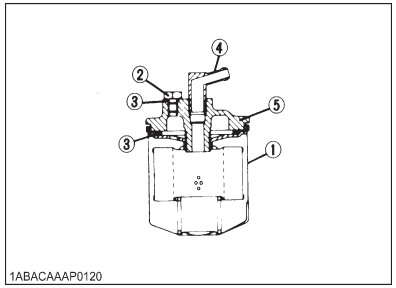

(1) Fuel filter cartridge
(2) Air vent plug
(3) O ring
(4) Pipe joint
(5) Cover

duma rent
www.duma-rent.com

ENGINE OIL

CAUTION

To avoid personal injury:

- **Be sure to stop the engine before checking and changing the engine oil and the oil filter cartridge.**
- **Do not touch muffler or exhaust pipes while they are hot; Severe burns could result. Always stop the engine and allow it to cool before conducting inspections, maintenance, or for a cleaning procedure.**
- **Contact with engine oil can damage your skin. Put on gloves when using engine oil. If you come in contact with engine oil, wash it off immediately.**

NOTE :

- Be sure to inspect the engine, locating it on a level place. If placed on gradients accurately, oil quantity may not be measured.

■Checking oil level and adding engine oil

1. Check the engine oil level before starting or more than 5 minutes after stopping the engine.
2. Remove the oil level gauge, wipe it clean and reinstall it.
3. Take the oil level gauge out again, and check the oil level.

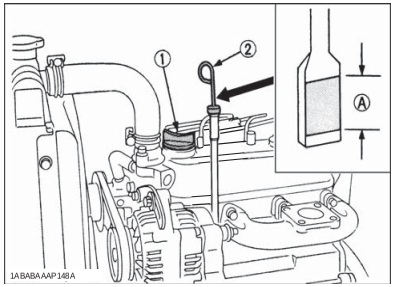

(1) Oil filler plug
(2) Oil level gauge

[Lower end of oil level gauge]
(A) Engine oil level within this range is proper.

4. If the oil level is too low, remove the oil filler plug, and add new oil to the prescribed level.
5. After adding oil, wait more than 5 minutes and check the oil level again. It takes some time for the oil to drain down to the oil pan.

Engine oil quantity

Model	Quantity
D1005-E3, D1105-E3, D1105-TE3	5.1 L (1.35 U.S. gals.)
D1305-E3	5.7 L (1.51 U.S. gals.)
V1305-E3, V1505-E3	6.0 L (1.59 U.S. gals.)
V1505-TE3	6.7 L (1.77 U.S. gals.)

Oil quantities shown are for standard oil pans.

IMPORTANT :

- Engine oil should be MIL-L-2104C or have properties of API classification CF or higher. Change the type of engine oil according to the ambient temperature.

above 25°C (77°F)	SAE30 or SAE10W-30 SAE15W-40
-10°C to 25°C (14°F to 77°F)	SAE10W-30 or SAE15W-40
below -10°C (14°F)	SAE10W-30

- When using oil of different brands from the previous one, be sure to drain all the previous oil before adding the new engine oil.

ENGLISH

ENGLISH

■Changing engine oil

CAUTION

To avoid personal injury:

- **Be sure to stop the engine before draining engine oil.**
- **When draining engine oil, place some container underneath the engine and dispose it according to local regulations.**
- **Do not drain oil after running the engine. Allow engine to cool down sufficiently.**

1. Change oil after the initial 50 hours of operation and every 200 hours thereafter.
2. Remove the drain plug at the bottom of the engine, and drain all the old oil. Drain oil will drain easier when the oil is warm.

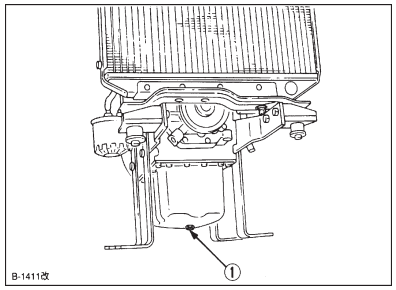

(1) Oil drain plug

3. Add new engine oil up to the upper limit of the oil level gauge.

■Replacing the oil filter cartridge

CAUTION

To avoid personal injury:

- **Be sure to stop the engine before changing the oil filter cartridge.**
- **Allow engine to cool down sufficiently, oil can be hot and cause burns.**

1. Replace the oil filter cartridge after the initial 50 hours of operation and every 200 hours thereafter.
2. Remove the old oil filter cartridge with a filter wrench.
3. Apply a film of oil to the gasket for the new cartridge.
4. Screw in the cartridge by hand. When the gasket contacts the seal surface, tighten the cartridge enough by hand. Because, if you tighten the cartridge with a wrench, it will be tightened too much.

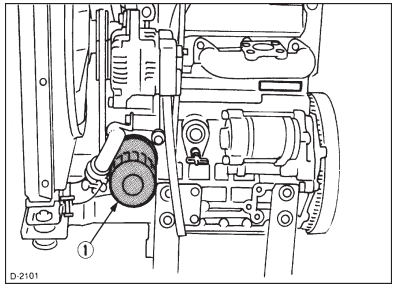

(1) Oil filter cartridge
Remove with a filter wrench
(Tighten with your hand)

5. After the new cartridge has been replaced, the engine oil level normally decreases a little. Thus, run the engine for a while and check for oil leaks through the seal before checking the engine oil level. Add oil if necessary.

NOTE :

- Wipe off any oil sticking to the machine completely.

duma rent
www.duma-rent.com

RADIATOR

Coolant will last for one day's work if filled all the way up before operation start. Make it a rule to check the coolant level before every operation.

WARNING

To avoid personal injury:

- **Do not stop the engine suddenly, stop it after about 5 minutes of unloaded idling.**
- **Work only after letting the engine and radiator cool off completely (more than 30 minutes after it has been stopped).**
- **Do not remove the radiator cap while coolant is hot. When cool to the touch, rotate cap to the first stop to allow excess pressure to escape. Then remove cap completely.**
  If overheats should occur, steam may gush out from the radiator or recovery tank; Severe burns could result.

■Checking coolant level, adding coolant

1. Remove the radiator cap, after the engine has completely cooled, and check to see that coolant reaches the supply port.

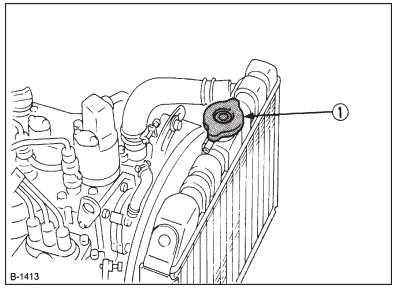

(1) Radiator pressure cap

2. If the radiator is provided with a recovery tank, check the coolant level of the recovery tank. When it is between the "FULL" and "LOW" marks, the coolant will last for one day's work.

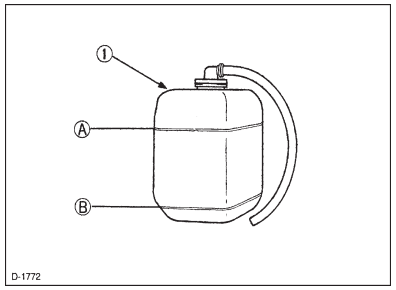

(1) Recovery tank (A) "FULL" (B) "LOW"

3. When the coolant level drops due to evaporation, add water only up to the full level.
4. Check to see that two drain cocks; one is at the crankcase side and the other is at the lower part of the radiator as figures below.

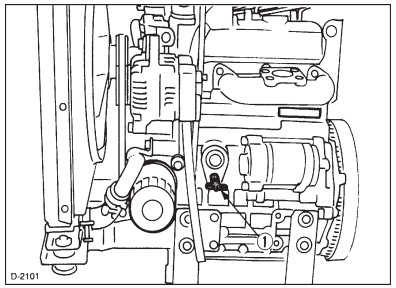

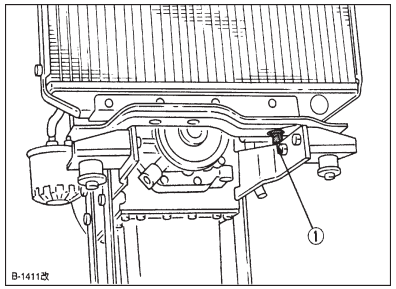

(1) Coolant drain cock

ENGLISH

ENGLISH

IMPORTANT :

- If the radiator cap has to be removed, follow the caution and securely retighten the cap.
- If coolant should be leak, consult your local KUBOTA dealer.
- Make sure that muddy or sea water does not enter the radiator.
- Use clean, fresh water and 50% anti-freeze to fill the recovery tank.
- Do not refill recovery tank with coolant over the "FULL" level mark.
- Be sure to close the radiator cap securely. If the cap is loose or improperly closed, coolant may leak out and decrease quickly.

■Changing coolant

1. To drain coolant, always open both drain cocks and simultaneously open the radiator cap as well. With the radiator cap kept closed, a complete drain of water is impossible.
2. Remove the overflow pipe of the radiator pressure cap to drain the recovery tank.
3. Prescribed coolant volume (U.S.gallons)

Models	Quantity
D1005-E3, D1105-E3, D1105-TE3, D1305-E3	3.1 L (0.82 U.S.gals.)
V1305-E3, V1505-E3	4.0 L (1.06 U.S.gals.)
V1505-TE3	5.0 L (1.32 U.S.gals.)

NOTE :

- Coolant quantities shown are for standard radiators.

4. An improperly tightened radiator cap or a gap between the cap and the seat quickens loss of coolant.
5. Coolant (Anti-freeze)

Season	Coolant
All seasons	Pure water and anti-freeze (See "Anti-freeze" in "RADIATOR" section.)

■Remedies for quick decrease of coolant

1. Check any dust and dirt between the radiator fins and tube. If any, remove them from the fins and the tube.
2. Check the tightness of the fan belt. If loose, tighten it securely.
3. Check the internal blockage in the radiator hose. If scale forms in the hose, clean with the scale inhibitor or its equivalent.

■Checking radiator hoses and clamp

CAUTION

To avoid personal injury:

- **Be sure to check radiator hoses and hose clamps periodically. If radiator hose is damaged or coolant leaks, overheats or severe burns could occur.**

Check to see if radiator hoses are properly fixed every 200 hours of operation or 6 months, whichever comes first.

1. If hose clamps are loose or water leaks, tighten hose clamp securely.
2. Replace hoses and tighten hose clamps securely, if radiator hoses are swollen, hardened or cracked.

Replace hoses and hose clamps every 2 years or earlier, if checked and found that hoses are swollen, hardened or cracked.

■Precaution at overheating

The event that the coolant temperature is nearly or more than the boiling point is called **"OVERHEATING"**.
While running, make the following checks to see that all parts are working correctly. **If anything is unusual, inspect it, referring to the relevant description in "MAINTENANCE" and "PERIODIC SERVICE" section**.

◆ Coolant

If the coolant temperature warning lamp lights up or if steam or coolant does not stop squirting from the radiator overflow pipe, turn off the load and **keep the engine idling (COOLING-DOWN) for at least 5 minutes** to let it cool down gradually. Then stop the engine and take the following inspection and servicing.

1. Check to see if the coolant runs short or if there is any coolant leak;
2. Check to see if there is any obstacle around the cooling air inlet or outlet;
3. Check to see if there is any dirt or dust between radiator fins and tube;
4. Check to see if the fan belt is too loose; and
5. Check to see if radiator water pipe is clogged.

■Cleaning radiator core(outside)

If dust is between the fin and tube, wash it away with running water.

IMPORTANT :

- Do not clean radiator with firm tools such as spatulas or screwdrivers. They may damage specified fin or tube. It can cause coolant leaks or decrease cooling performance.

duma rent
www.duma-rent.com

■Anti-freeze

CAUTION

To avoid personal injury:

- **When using anti-freeze, put on some protection such as rubber gloves (Anti-freeze contains poison.).**
- **If should drink anti-freeze, throw up at once and take medical attention.**
- **When anti-freeze comes in contact with the skin or clothing, wash it off immediately.**
- **Do not mix different types of anti-freeze. The mixture can produce chemical reaction causing harmful substances.**
- **Anti-freeze is extremely flammable and explosive under certain conditions. Keep fire and children away from anti-freeze.**
- **When draining fluids from the engine, place some container underneath the engine body.**
- **Do not pour waste onto the grounds, down a drain, or into any water source.**
- **Also, observe the relevant environmental protection regulations when disposing of anti-freeze.**

Always use a 50/50 mix of long-life coolant and clean soft water in KUBOTA engines.
Contact KUBOTA concerning coolant for extreme conditions.

1. Long-life coolant (hereafter LLC) comes in several types. Use ethylene glycol (EG) type for this engine.
2. Before employing LLC-mixed cooling water, flush the radiator with fresh water. Repeat this procedure 2 or 3 times to clean up the radiator and engine block from inside.
3. Mixing the LLC
   Premix 50% LLC with 50% clean soft water. When mixing, stir it up well, and then fill into the radiator.
4. The procedure for the mixing of water and anti-freeze differs according to the make of the anti-freeze. Refer to SAE J1034 standard, more specifically also to SAE J814c.

Vol % Anti-freeze	Freezing Point		Boiling Point *	
	°C	°F	°C	°F
50	-37	-34	108	226

*At 1.013 x 10^5 Pa (760 mmHg) pressure (atmospheric). A higher boiling point is obtained by using a radiator pressure cap which permits the development of pressure within the cooling system.

5. Adding the LLC
   (1) Add only water if the coolant level reduces in the cooling system by evaporation.
   (2) If there is a coolant leak, add the LLC of the same manufacturer and type in the same coolant percentage.
   *Never add any long-life coolant of different manufacturer. (Different brands may have different additive components, and the engine may fail to perform as specified.)
6. When the LLC is mixed, do not employ any radiator cleaning agent. The LLC contains anti-corrosive agent. If mixed with the cleaning agent, sludge may build up, adversely affecting the engine parts.
7. Kubota's genuine long-life coolant has a service life of 2 years. Be sure to change the coolant every 2 years.

NOTE :

- The above data represent industry standards that necessitate a minimum glycol content in the concentrated anti-freeze.

AIR CLEANER

Since the air cleaner employed on this engine is a dry type, never apply oil to it.

1. Open the evacuator valve once a week under ordinary conditions - or daily when used in a dusty place. This will get rid of large particles of dust and dirt.
2. Wipe the inside air cleaner clean with cloth if it is dirty or wet.
3. Avoid touching the element except when cleaning.
4. When dry dust adheres to the element, blow compressed air from the inside turning the element. Pressure of compressed air must be under 205 kPa (2.1 kgf/cm^2, 30 psi).

5. Replace the element every year or every 6 cleanings.

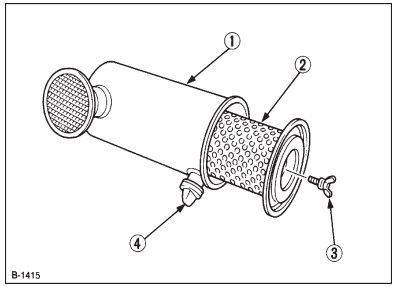

(1) Air cleaner body
(2) Element
(3) Wing bolt
(4) Evacuator valve

IMPORTANT :

- Make sure the wing bolt for the element is tight enough. If it is loose, dust and dirt may be sucked in, wearing down the cylinder liner and piston ring earlier and thereby resulting in poor power output.
- Do not overservice the air cleaner element. Overservicing may cause dirt to enter the engine causing premature wear. Use the dust indicator as a guide on when to service.

■Evacuator valve

Open the evacuator valve once a week under ordinary conditions - or daily when used in a dusty place - to get rid of large particles of dust and dirt.

■For the air cleaner with a dust cup (optional)

Remove and clean out the dust cup before it becomes half full with dust; usually once a week, or even every day if the working surroundings are dusty.
Install the air cleaner dust cup with "TOP" indicated on the rear of the cup in the up position. (However, it may be installed in either direction when the cover is placed at the lower part.)

IMPORTANT :

- If the dust cup is mounted incorrectly, dust or dirt does not collect in the cup, and direct attachments of the dust to the element will cause its lifetime to shorten to a great extent.

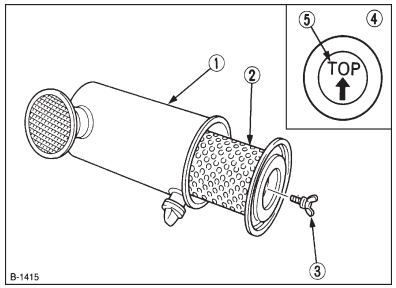

(1) Air cleaner body
(2) Element
(3) Wing bolt
(4) Dust cup
(5) "TOP" mark

■Dust indicator (optional)

If the red signal on the dust indicator attached to the air cleaner is visible, the air cleaner has reached the service level.
Clean the element immediately, and reset the signal with the "RESET" button.

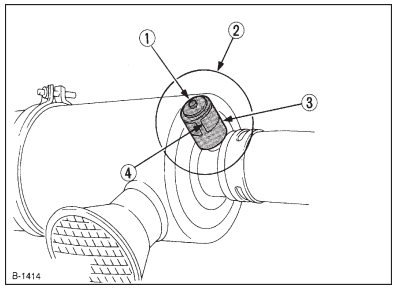

(1) "RESET" button
(2) Dust indicator
(3) Service level
(4) Signal

duma rent
www.duma-rent.com

ELECTRIC WIRING

CAUTION

To avoid personal injury:

- **Shorting of electric cable or wiring may cause a fire.**
  - **Check to see if electric cables and wiring are swollen, hardened or cracked.**
  - **Keep dust and water away from all power connections.**
    Loose wiring terminal parts, make bad connections. Be sure to repair them before starting the engine.

Damaged wiring reduces the capacity of electrical parts. Change or repair damaged wiring immediately.

FAN BELT

■Adjusting Fan Belt Tension

CAUTION

To avoid personal injury:

- **Be sure to stop the engine and remove the key before checking the belt tension.**
- **Be sure to reinstall the detached safety shield after maintenance or checking.**

Proper fan belt tension	A deflection of between 7 to 9 mm (0.28 to 0.35 in.) when the belt is pressed in the middle of the span.

1. Stop the engine and remove the key.
2. Apply moderate thumb pressure to belt between the pulleys.
3. If tension is incorrect, loosen the alternator mounting bolts and, using a lever placed between the alternator and the engine block, pull the alternator out until the deflection of the belt falls within acceptable limits.
4. Replace fan belt if it is damaged.

IMPORTANT :

- If belt is loosen or damaged and the fan is damaged, it could result in overheats or insufficient charging. Correct or replace belt.

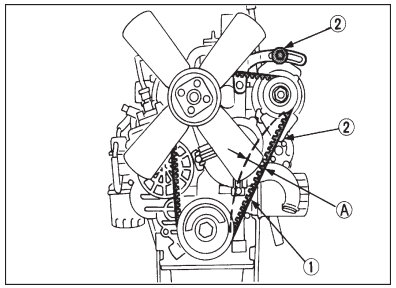

(1) Fan belt
(2) Bolt and nut
(A) 7 to 9 mm (0.28 to 0.35 in.) (under load of 10 kgf (22.1 lbs))

ENGLISH

CARRIAGE AND STORAGE

CARRIAGE

CAUTION

To avoid personal injury:

- **Fix the engine securely not to fall during operation.**
- **Do not stand near or under the engine while carrying it.**
- **The engine is heavy. In handling it, be very alert not to get your hands and body caught in.**

1. Use carrier such as crane when carrying the engine, or hurt your waist and yourself. Support the engine securely with rope not to fall while carrying it.
2. When lifting the engine, put the hook securely to metal fittings attached to the engine. Use strong hook and fittings enough to hang the engine.

STORAGE

CAUTION

To avoid personal injury:

- **Do not clean the machine with engine running.**
- **To avoid the danger of exhaust fume poisoning, do not operate the engine in a closed building without proper ventilation.**
- **When storing the engine just after running, let the engine cool off.**

Before storing the engine for more than a few months, remove any dirt on the machine, and:

1. Drain the coolant in the radiator. Open the cock at the bottom of the radiator, and remove the pressure cap to drain water completely. Leave the cock open. Hang a note written "No water" on the pressure cap. Since water may freeze when the temperature drops below 0°C (32°F), it is very important that no water is left in the machine.
2. Remove dirty engine oil, fill with new oil and run the engine for about 5 minutes to let the oil penetrate to all the parts.
3. Check all the bolts and nuts, and tighten if necessary.
4. Remove the battery from the engine, adjust the electrolyte level, and recharge it. Store the battery in a dry and dark place.
5. When the engine is not used for a long period of time, run it for about 5 minutes under no load every 2 to 3 months to keep it free from rust. If the engine is stored without any running, moisture in the air may condense into dew over the sliding parts of the engine, resulting in rust there.
6. If you forget to run the engine for longer than 5 to 6 months, apply enough engine oil to the valve guide and valve stem seal and make sure the valve works smoothly before starting the engine.
7. Store the engine in a flat place and remove the key from engine.
8. Do not store the engine in a place where has flammable materials such as dry grass or straw.
9. When covering the engine for storage, let engine and muffler cool off completely.
10. Operate the engine after checking and repairing damaged wirings or pipes, and clearing flammable materials carried by mouse.

duma rent
www.duma-rent.com

TROUBLESHOOTING

ENGLISH

If the engine does not function properly, use the following chart to identify and correct the cause.

■When it is difficult to start the engine

Cause	Countermeasures
Fuel is thick and doesn't flow.	* Check the fuel tank and fuel filter. * Remove water, dirt and other impurities. * As all fuel will be filtered by the filter, if there should be water or other foreign matters on the filter, clean the filter with kerosene.
Air or water mixed in fuel system	* If air is in the fuel filter or injection lines, the fuel pump will not work properly. * To attain proper fuel injection pressure, check carefully for loosened fuel line coupling, loose cap nut, etc. * Loosen joint bolt stop fuel filter and air vent screws of fuel injection pump to eliminate all the air in the fuel system.
Engine oil becomes thick in cold weather and engine cranks slow.	* Change grade of oil according to the weather (temperature).
Battery is discharged and the engine will not crank.	* Charge battery. * In winter, always remove battery from machine, charge fully and keep indoors. Install in machine at time of use.

■When output is insufficient

Cause	Countermeasures
Fuel is insufficient.	* Check fuel system.
Overheating of moving parts	* Check lubricating oil system. * Check to see if lubricating oil filter is working properly. * Filter element deposited with impurities would cause poor lubrication. Change element.
Air cleaner is dirty	* Clean the element every 100 hours of operation.
Injection pump wear	* Do not use poor quality fuel as it will cause wear of the pump. Only use No. 2-D diesel fuel. (See "FUEL" in "PERIODIC SERVICE" Section.)

NOTE :

- If the cause of trouble can not be found, contact your KUBOTA dealer.

ENGLISH

■When engine suddenly stops

Cause	Countermeasures
Lack of fuel	* Check the fuel tank and refill the fuel, if necessary. * Also check the fuel system for air or leaks.
Bad nozzle	* If necessary, replace with a new nozzle.
Moving parts are overheated due to shortage of lubrication oil or improper lubrication.	* Check amount of engine oil with oil level gauge. * Check lubricating oil system. * At every 2 times of oil change, oil filter cartridge should be replaced.

■When color of exhaust is especially bad

Cause	Countermeasures
Fuel is of extremely poor quality.	* Select good quality fuel. Use No. 2-D diesel fuel only.
Nozzle is bad.	* If necessary, replace with new nozzle.

■When engine must be stopped immediately

Cause	Countermeasures
Color of exhaust suddenly turns dark.	* Check the fuel injection system, especially the fuel injection nozzle.
Bearing parts are overheated.	* Check the lubricating system.
Oil lamp lights up during operation.	* Check the lubricating system. * Check the function of the relieve valve in the lubricating system. * Check pressure switch. * Check filter base gasket.

■When engine overheats

Cause	Countermeasures
Engine oil insufficient	* Check oil level. Replenish oil as required.
Fan belt broken or elongated	* Change belt or adjust belt tension.
Coolant insufficient	* Replenish coolant.
Excessive concentration of antifreeze	* Add water only or change to coolant with the specified mixing ratio.
Radiator net or radiator fin clogged with dust	* Clean net or fin carefully.
Inside of radiator or coolant flow route corroded	* Clean or replace radiator and parts.
Fan or radiator or radiator cap defective	* Replace defective parts.
Thermostat defective	* Check thermostat and replace if necessary.
Temperature gauge or sensor defective	* Check temperature with thermometer and replace if necessary.
Overload running	* Reduce load.
Head gasket defective or water leakage	* Replace parts.
Unsuitable fuel used	* Use the specified fuel.

duma rent
www.duma-rent.com

SPECIFICATIONS

Model	D1005-E3		D1105-E3
Type	Vertical, water-cooled, 4-cycle diesel engine		
Number of cylinders	3		
Bore and stroke mm (in.)	76 × 73.6 (2.99 × 2.90)		78 × 78.4 (3.07 × 3.09)
Total displacement cm^3 (cu.in.)	1001 (61.08)		1123 (68.53)
Combustion chamber	Spherical Type (E-TVCS)		
SAE NET Intermittent kW / rpm H.P. (SAEJ1349) (HP / rpm)	16.8/3000 (22.5/3000)	17.5/3600 (23.5/3600)	17.8/3000 (23.9/3000)
SAE NET Continuous kW / rpm H.P. (SAEJ1349) (HP / rpm)	14.6/3000 (19.6/3000)	15.2/3600 (20.4/3600)	15.5/3000 (20.8/3000)
Maximum bare speed rpm	3200	3800	3200
Minimum bare idling speed rpm	850 ~ 950		
Order of firing	1-2-3		
Direction of rotation	Counter-clockwise (viewed from flywheel side)		
Injection pump	Bosch MD Type Mini Pump		
Injection pressure	13.73 Mpa (140 kgf/cm^2, 1991 psi)		
Injection timing (Before T.D.C.)	18°	21°	18°
Compression ratio	24 : 1		
Fuel	Diesel Fuel No.2-D (ASTM D975)		
Lubricant (API classification)	above CF grade		
Dimension mm (in.) (length × width × height)	497.8 × 396.0 × 602.0 (19.60 × 15.59 × 23.7)		
Dry weight (BB Spec.) kg (lbs.)	93 (205.0)		
Starting system	Cell starter (with glow plug)		
Starting motor	12 V, 1.0 kW		
Charging generator	12 V, 360 W		
Recommended battery capacity	12 V, 65 AH, equivalent		

NOTE :
- Specifications are subject to change without notice.

ENGLISH

ENGLISH

Model	D1105-TE3	D1305-E3
Type	Vertical, water-cooled, 4-cycle diesel engine	
Number of cylinders	3	
Bore and stroke mm (in.)	78 × 78.4 (3.07 × 3.09)	78 × 88 (3.07 × 3.46)
Total displacement cm^3 (cu.in.)	1123 (68.53)	1261 (76.95)
Combustion chamber	Spherical Type (E-TVCS)	
SAE NET Intermittent kW / rpm H.P. (SAEJ1349) (HP / rpm)	23.5/3000 (31.5/3000)	21.0/3000 (28.2/3000)
SAE NET Continuous kW / rpm H.P. (SAEJ1349) (HP / rpm)	20.4/3000 (27.3/3000)	18.2/3000 (24.4/3000)
Maximum bare speed rpm	3200	
Minimum bare idling speed rpm	850 ~ 950	850 ~ 950
Order of firing	1-2-3	
Direction of rotation	Counter-clockwise (viewed from flywheel side)	
Injection pump	Bosch MD Type Mini Pump	
Injection pressure	13.73 Mpa (140 kgf/cm^2, 1991 psi)	
Injection timing (Before T.D.C.)	18°	19°
Compression ratio	24 : 1	
Fuel	Diesel Fuel No.2-D (ASTM D975)	
Lubricant (API classification)	above CF grade	
Dimension mm (in.) (length × width × height)	497.8 × 433.0 × 626.0 (19.60 × 17.05 × 24.65)	497.6 × 396.0 × 590.1 (19.59 × 15.59 × 23.2)
Dry weight (BB Spec.) kg (lbs.)	97 (213.8)	95 (209.4)
Starting system	Cell starter (with glow plug)	
Starting motor	12 V, 1.0 kW	12 V, 1.2kW
Charging generator	12 V, 360 W	12 V, 480 W
Recommended battery capacity	12 V, 65 AH, equivalent	12 V, 70 AH, equivalent

NOTE :
- Specifications are subject to change without notice.

duma rent
www.duma-rent.com

ENGLISH

Model	V1305-E3	V1505-E3		V1505-TE3
Type	Vertical, water-cooled, 4-cycle diesel engine			
Number of cylinders	4			
Bore and stroke mm (in.)	76 × 73.6 (2.99 × 2.90)	78 × 78.4 (3.07 × 3.09)		
Total displacement cm^3 (cu.in.)	1335 (81.47)	1498 (91.41)		
Combustion chamber	Spherical Type (E-TVCS)			
SAE NET Intermittent kW / rpm H.P. (SAEJ1349) (HP / rpm)	23.0/3600 (30.8/3600)	25.0/3000 (33.5/3000)	27.5/3600 (36.9/3600)	31.3/3000 (42.0/3000)
SAE NET Continuous kW / rpm H.P. (SAEJ1349) (HP / rpm)	20.0/3600 (26.8/3600)	21.7/3000 (29.1/3000)	23.9/3600 (32.0/3600)	27.2/3000 (36.5/3000)
Maximum bare speed rpm	3800	3200	3800	3200
Minimum bare idling speed rpm	850 ~ 950			1000 ~ 1100
Order of firing	1-3-4-2			
Direction of rotation	Counter-clockwise (viewed from flywheel side)			
Injection pump	Bosch MD Type Mini Pump			
Injection pressure	13.73 Mpa (140 kgf/cm^2, 1991 psi)			
Injection timing (Before T.D.C.)	21°	18°	21°	18°
Compression ratio	24 : 1			23 : 1
Fuel	Diesel Fuel No.2-D (ASTM D975)			
Lubricant (API classification)	above CF grade			
Dimension mm (in.) (length × width × height)	583.8 × 396.0 × 607.0 (22.98 × 15.59 × 23.90)	591.3 × 396.0 × 607.0 (23.28 × 15.59 × 23.90)		591.3 × 433.0 × 621.0 (23.28 × 17.05 × 24.45)
Dry weight (BB Spec.) kg (lbs.)	110 (242.5)			114 (251.3)
Starting system	Cell starter (with glow plug)			
Starting motor	12 V, 1.2 kW			
Charging generator	12 V, 360 W			
Recommended battery capacity	12 V, 70 AH, equivalent			

NOTE :
- Specifications are subject to change without notice.

ENGLISH

WIRING DIAGRAMS

EU standard
(Energize to run)

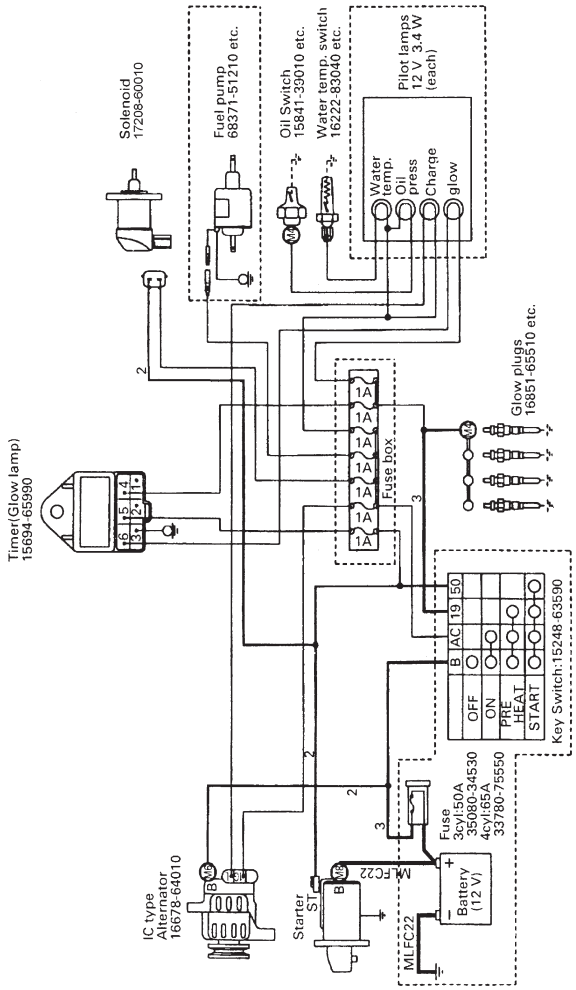

★ The parts boxed in ⬚ are reference, NOT equiped for standard engine spec.
★ Non marked wire dia. is 0.8~1.25 mm^2.

duma rent
www.duma-rent.com

ENGLISH

KEA/SAE standard
(Energize to run)

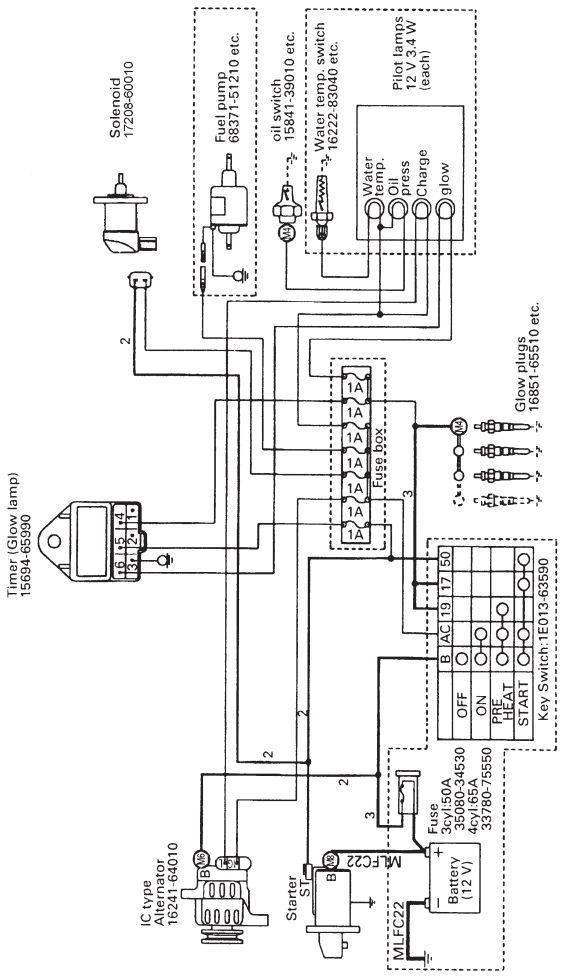

★ The parts boxed in ⬚ are reference, NOT equiped for standard engine spec.
★ Non marked wire dia. is 0.8~1.25 mm².

duma rent
www.duma-rent.com

11.5 Radio control

Appendix

Betriebsanleitung Allgemein

General Operating Manual

www.abitronremote.com

ABITRON Austria GmbH

Wiesnerstraße 20
4950 Altheim • Österreich
Tel.: +43 (0) 7723 44860
Fax: +43 (0) 7723 44860-94
Email: info@abitron.at

ABITRON Germany GmbH

Adalbert-Stifter-Straße 2
84085 Langquaid • Deutschland
Tel.: +49 (0) 9452 189-0
Fax: +49 (0) 9452 189-201
Email: info@abitron.de

duma rent

www.duma-rent.com

Inhalt / Index

Betriebsanleitung ➔

General Operating Manual ➔

CE Konformitätserklärung / EC Declaration of Conformity ➔

Originalbetriebsanleitung Version 2015-06-03

Technische Änderungen vorbehalten

Copyright: Alle Rechte sind vorbehalten. Das Kopieren, Umschreiben, Einstellen in Datenabfragesysteme oder Übersetzen in andere Sprachen in jeglicher Art und Weise ist ausschließlich mit der schriftlichen Genehmigung der Firma ABITRON Germany GmbH zulässig.

Verfasser: ABITRON Germany / Austria GmbH

Manual Version 2015-06-03

Subject to technical changes without prior notice

This is a translation from German. In case of doubt, the German version of the operating manual is authoritative.

Copyright: All rights reserved. No part of this manual may be reproduced, reshaped, stored in a data retrieval system or translated in another language without the written permission of company ABITRON Germany / Austria GmbH.

Author: ABITRON Germany / Austria GmbH

Allgemeine Betriebsanleitung

Seite

1. Einleitung 5
- 1.1 Die Betriebsanleitung
- 1.2 Wie die Anleitung anzuwenden ist
- 1.3 Produktions- und Systemnummern

2. Sicherheitsmaßnahmen 6
- 2.1 Sicherheit dieser Funkfernsteuerung
- 2.2 Sicherheitshinweise
- 2.3 Autorisierte Bediener
- 2.4 Gefahrenquellen
- 2.5 Sicherheitsmaßnahmen und Vorkehrungen im Arbeitsbereich
- 2.6 Schutzeinrichtungen
- 2.7 Verhalten im Notfall

3. Sicherheitseinrichtungen 7
- 3.1 Sender
- 3.2 Empfänger
- 3.3 System

4. Installation 8
- 4.1 Positionieren der Empfangseinheit
- 4.2 Installation der Ausgangsverdrahtung
- 4.3 Korrekte Montage der Empfangseinheit
- 4.4 Antennen-Montage
- 4.5 Kennzeichnung

5. Kontrolle vor der Inbetriebnahme 10
- 5.1 Hinweis zur Bedienung
- 5.2 Sichtkontrollen
- 5.3 Vor der Inbetriebnahme
- 5.4 Funktionstest der Stopptaste

6. Inbetriebnahme 11
- 6.1 Einschaltvorgang für Sender OHNE Schlüsselschalter
- 6.2 Einschaltvorgang für Sender MIT Schlüsselschalter
- 6.3 Statusanzeige im Empfänger
- 6.4 Betrieb mit Kabelsteuerung (optional)

7. Bedienung der MFS und HL Systeme 12
- 7.1 MFS Übertragungstechnologie
- 7.2 H-Link

Seite

8. Ladegerät- und Akkuhandhabung 13
- 8.1 Wechseln und Aufladen der Akkus
- 8.2 Anzeigen und Fehlermeldungen des ABITRON Ladegerätes UCH-2
- 8.3 Anzeigen und Fehlermeldungen des ABITRON Ladegerätes BCM-1

9. Batteriehandhabung 14
- 9.1 Wechseln der Alkali-Batterien (Größe AA -Mignon)
- 9.2 Batteriewechsel beim Modell POCKET
- 9.3 Batteriewechsel beim Modell HAND HELD
- 9.4 ABITRON Batteriefach

10. Diagnose 15

11. Allgemeine technische Daten 17
- 11.1 System
- 11.2 Sender
- 11.3 Empfänger
- 11.4 Akku und Ladegerät
- 11.5 Technische Datenblätter
- 11.6 Allgemein

12. Wartung, Garantie, Entsorgung 19
- 12.1 Wartung
- 12.2 Garantie und Gewährleistung
- 12.3 Entsorgung
- 12.4 Befähigte Personen nach Betriebssicherheitsverordnung
- 12.5 Ersatzteile

13. Abkürzungen und Begriffserklärungen 20
- 13.1 Abkürzungen
- 13.2 Begriffserklärungen

14. Erklärung zum Einbau- und Sicherheitstest 21

duma rent

www.duma-rent.com

1. Einleitung

1.1 Die Betriebsanleitung

Wir freuen uns, dass Sie sich für ein Qualitätsprodukt von ABITRON entschieden haben. Unsere Sicherheitsfunkfernsteuerungen stehen für ein hohes Maß an Qualität, Zuverlässigkeit und Innovation.

Sie möchten die ganze Welt von ABITRON erleben und kennenlernen?

Besuchen Sie einfach unsere Homepage.

Lesen Sie die Betriebsanleitungen aller Systembestandteile sorgfältig und vollständig durch, bevor Sie die Anlage betreiben. Der Inhalt wird Sie mit den Sicherheitsanweisungen und den Bedienelementen während des normalen Betriebes und der Wartung vertraut machen. Die Betriebsanleitung ist so aufzubewahren, dass der Benutzer sie immer einsehen kann.

1.2 Wie die Anleitung anzuwenden ist

- Die Anleitung ist als Teil des Produktes zu betrachten.
- Die Anleitung ist so lange zu behalten, wie die Anlage in Betrieb ist.
- Die Anleitung ist an jeden nachfolgenden Besitzer oder Benutzer des Produktes weiterzugeben.
- Stellen Sie sicher, dass jede erhaltene Ergänzung der Anleitung beigefügt wird, z. B. technisches Datenblatt.

1.3 Produktions- und Systemnummern

Wenn Sie sich mit Ihrem Händler oder Partner wegen Reparaturen, Wartungsarbeiten oder Ersatzteilen in Verbindung setzen, sollten Sie die Systemnummern des Senders und Empfängers bereit halten. Die Nummern finden Sie auf dem Typenschild, welches sich außen auf Sender und Empfänger befindet.

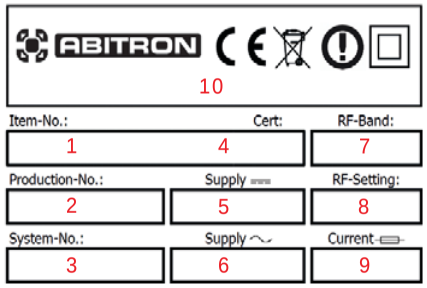

Typenschild - Felder und Bedeutung

1. Sender- bzw. Empfängertyp
2. Produktionsnummer
3. Systemnummer
4. Baumusterzertifizierung
5. Bemessungsspannung DC
6. Bemessungsspannung AC
7. Frequenzbereich
8. HF-Teil Kanaleinstellung
9. Zulässiger Speisestrom Iz
10. Firmenangaben / Zulassungen

Erklärung zu Produktions- & Systemnummer

Jede Produktionsnummer setzt sich aus 12 Ziffern und jede Systemnummer aus 7 Ziffern zusammen. Die Bedeutung der einzelnen Ziffern von links nach rechts:

1 0814 1000001	Produktionsnummer
1	Ländercode
08	Produktionsmonat
14	Produktionsjahr
1000001	fortlaufende Nummer (AG)
7000001	fortlaufende Nummer (AA)
1 000001	Systemnummer
1	Ländercode
000001	fortlaufende Nummer

		Ländercode
A	ABITRON Germany (AG)	1
B	ABITRON Austria (AA)	7

z. B. A Produktionsnummer = 108141000001 = produziert in Deutschland, August, 2014, # 1000001
z. B. B Produktionsnummer = 708147000001 = produziert in Österreich, August, 2014, #7000001 usw.

Bitte beachten Sie die Pläne im Anhang sowie die dazugehörigen technischen Datenblätter auf unserer Homepage.
Die Pläne zeigen Ihnen die genaue Ausführung Ihrer Funkfernsteuerung.

2. Sicherheitsmaßnahmen

2.1 Sicherheit dieser Funkfernsteuerung

Diese Funkfernsteuerung verfügt über elektronische und mechanische Sicherheitsvorrichtungen, für die funktionale Sicherheit, Störfestigkeit und Störsicherheit. Es ist nicht möglich, Steuerbefehle, die von anderen Sendern stammen, zu verarbeiten bzw. an andere Empfangseinheiten zu übertragen, da alle Informationen von Sender und Empfänger verschlüsselt sind.

2.2 Sicherheitshinweise

Die Benutzung einer Funkfernsteuerung ermöglicht dem Bediener in seinem Arbeitsbereich große Bewegungsfreiheit und eine erhöhte Bedienungsgenauigkeit. Dennoch müssen der Bediener und das mit der Wartung anvertraute Personal stets aufmerksam sein, um alle Vorteile nutzen zu können. Eine korrekte und sichere Benutzung der Funkfernsteuerung zwingt den Bediener dazu, den Lauf der gesteuerten Maschine stets zu beobachten.

2.3 Autorisierte Bediener müssen gemäß Betriebssicherheitsverordnung geschult sein!

Prüfen Sie stets die Arbeitsanweisungen Ihrer Maschine, um eventuell weitere wichtige Informationen zu erhalten!
Der Bediener muss sich davon überzeugen, dass **nicht autorisierte Personen** den Sender nicht bedienen können. Hierzu muss er das Gerät am Schlüsselschalter ausschalten, den Schlüssel abziehen oder die Batterien aus dem Gehäuse entfernen und das Gerät an einem sicheren Ort verschließen. Nur so können wirksam rechtswidrige Handlungen durch nicht autorisierte dritte Personen verhindert werden. Der Benutzer muss Zugang zu allen Arbeitsanweisungen haben, die zu einem korrekten Funktionieren der zu steuernden Maschine nötig sind. Wenn das Gerät nicht vom Käufer selber benutzt wird, verliehen, vermietet oder verkauft wurde, stellen Sie diese Anleitung und die notwendige Sicherheitseinweisung vor dem Betrieb zur Verfügung.
Vor Benutzung der Funkfernsteuerung muss der Bediener die Anweisungen jedes Kapitels in diesem Handbuch gelesen haben und sicher sein, diese genau verstanden zu haben.

2.4 Gefahrenquellen

Das System ermöglicht die Steuerung von Maschinen über Funk. Die Übertragung von Steuerkommandos erfolgt jedoch auch außerhalb der Sichtweite!
Darum:

- Wenn der Sender nicht benutzt wird, schalten Sie ihn aus und ziehen Sie den Schlüsselschalter ab.
- Falls Ihr Sender keinen Schlüsselschalter besitzt, entfernen Sie den Akku.
- Die Sicherheitseinrichtungen dürfen nicht entfernt oder verändert werden.
- **ACHTUNG! Bei Zuwiderhandlung entfallen die Mängelansprüche nach ABGB/UGB bzw. BGB/HGB und die Ersatzpflicht gemäß dem Produkthaftungsgesetz.**

2.5 Sicherheitsmaßnahmen und Vorkehrungen im Arbeitsbereich

Stellen Sie sicher, dass im Arbeitsbereich, in dem die Funkfernsteuerung verwendet wird, keine Gefahr für den Bediener besteht. Überzeugen Sie sich z. B. davon, dass im Arbeitsbereich keine Hindernisse stehen oder gefährliche Situationen entstehen können, die die Arbeitssicherheit beeinträchtigen könnten.
Sorgen Sie für einen rutschsicheren Stand. Vergewissern Sie sich vor jeder Inbetriebnahme der Funkfernsteuerung, dass sich niemand im Arbeits- oder Schwenkbereich Ihrer Last befindet. Falls für Ihren Sender eine Tragehilfe vorgesehen ist, so ist diese auch zu benutzen.

2.6 Schutzeinrichtungen

Alle industriellen ABITRON Funkfernsteuerungen sind mit einer Stopptaste ausgerüstet, die sich auf der Sendereinheit befindet.

Das Funksystem verfügt über Schutzeinrichtungen, die in folgenden Fällen automatisch eingreifen:

- Störfunk im Arbeitsbereich, der auf den Frequenzbereich der ABITRON Funksteuerung einwirkt.
- Übertretung des Aktionsradius der Sendereinheit.

In diesen Fällen versetzt sich die Funkfernsteuerung sofort in den Nothaltstatus und unterbricht jedes Ausgangssignal der Empfangseinheit.

2.7 Verhalten im Notfall

1 Drücken Sie den roten Stopptaster.
2 Drehen Sie den Schlüsselschalter auf „OFF".
3 Warten Sie, bis die Maschine stillsteht.
4 Verhalten Sie sich, wie es in der Anleitung der Maschine steht.

Drehentriegelbarer Stopp

Drehentriegelbarer Stopp

Druck-Zug-Stopp

duma rent
www.duma-rent.com

3. Sicherheitseinrichtungen

3.1 Sender

Schlüsselschalter:
Unsere Sender sind zum größten Teil mit einem Schlüsselschalter ausgestattet. Dieser Schlüssel ermöglicht es dem Bediener den Sender abzuschalten, wenn er nicht benutzt wird. Außerdem schützt er vor Missbrauch durch Unbefugte und im Fall von Wartungsarbeiten an der Maschine.

Selbsttest:
Nach Einschalten des Senders mittels Schlüsselschalter führt das System einen Selbsttest durch. Ein positives Testergebnis wird durch zwei akustische Signale bestätigt. Die grüne LED bestätigt die Startbereitschaft des Senders durch Blinken.

Taster „Start/Hupe" – Nullstellungszwang:
Nach dem Selbsttest muss der Sender durch Drücken des Tasters „Start/Hupe" gestartet werden. Dadurch wird der Empfänger in Betrieb gesetzt. Alle Steuerfunktionen müssen in Nullstellung sein, damit das System gestartet werden kann. Wenn eine der Steuerfunktionen aktiviert ist, kann das System nicht in Betrieb genommen werden. Diese Sicherheitseinrichtung gewährleistet, dass keine Maschinenbewegung versehentlich ausgelöst werden kann. Der Startknopf kann nicht durch Zerstörung oder außer Kraft setzen übergangen werden. Wenn der Startknopf während des Selbsttests gedrückt wird, wird das System nicht gestartet.

Stopptaster:
Unsere Sender sind mit einem überlistsicheren Stopptaster ausgestattet. Das Stoppsignal wird als digitales Signal gesendet. Außerdem wird der Stoppzustand während des Selbsttests bei der Inbetriebnahme überwacht. Wenn der Stopptaster während der Inbetriebnahme gedrückt wird, wird das System nicht gestartet. Der Stopptaster ist die wichtigste Sicherheitseinrichtung der Funkfernsteuerung. Er gewährleistet, dass der Bediener die Maschine während des Betriebes unverzüglich stoppen kann.

Akku-Überwachung:
Der Batteriestatus wird laufend von der Senderelektronik überwacht. Sollte die Batterie eine Unterspannung erreichen, so wird der Bediener optisch oder akustisch für ca. 30 Sekunden gewarnt. Im Anschluss gibt der Sender einen Befehl aus, wodurch die Maschine in einen sicheren Zustand gebracht wird. Bitte beachten Sie, dass eine frühzeitige Unterspannungserkennung (ca. 10 Minuten) erhältlich ist.

Mechanischer Aufbau:
Ein mechanischer Schutz rund um den Sender schützt die Schalter und Bedienhebel vor Stößen und bei Herabfallen. Ebenso verwenden Sie hierfür die ergonomisch gestalteten Tragehilfen. Das leichte, faserverstärkte PVC-Sendergehäuse hält den Anforderungen des täglichen Betriebes stand.

3.2 Empfänger

Selbsttest:
Nachdem der Empfänger mit Strom versorgt wurde, führt die Software einen Selbsttest durch. Wenn während des Selbsttests ein Fehler auftritt, wird sich der Empfänger nicht einschalten und im sicheren Zustand bleiben.

Nothaltstromkreis:
Im Empfänger ist ein spezieller Sicherheitsstromkreis eingebaut. Durch einen redundanten Aufbau funktioniert dieser selbstüberwachend.

Stopp:
Sobald der Empfänger das Nothaltsignal vom Sender empfängt
- wird die interne Stromversorgung zu den Ausgangsmodulen abgeschaltet.
- wird ein störungssicheres, selbstüberwachendes Nothaltausgangsrelais aktiviert.

Die Reaktionszeit für aktiven Stopp beträgt < 450 ms.

Spannungsversorgung:
Der Empfänger hat seine eigene elektronische Spannungsversorgung, die alle Empfängermodule mit Strom versorgt.

3.3 System

Systemnummer:
Jeder Funkfernsteuerung wird aus Sicherheitsgründen ihre eigene Adresse zugeordnet. Sie stellt sicher, dass nur der vorgesehene Empfänger vom dazugehörigen Sender aktiviert werden kann.

Funkstörung:
Im Fall einer Funkstörung schaltet das System nach 450 ms in den sicheren Zustand.

Software:
Die Software des Systems führt nach dem Einschalten einen Systemcheck durch, bei dem alle Sicherheitseinrichtungen überprüft werden. Das System schaltet in einen sicheren Zustand, falls eine Störung auftritt.

4. Installation

4.1 Positionieren der Empfangseinheit

Damit die Funksteuerung störungsfrei funktioniert, muss die Empfangseinheit so installiert werden, dass die Antenne einen maximalen Empfang hat. Metallteile der zu steuernden Maschine in der Umgebung der Empfangseinheit bilden eine Barriere, die einen guten Empfang verhindert. Wenn der Empfänger in einem metallisch geschlossenen Gehäuse oder in einem abgeschirmten Raum montiert wird, muss eine entsprechende Verlängerung und eine dazu passende Antenne eingesetzt werden, um eine entsprechende Reichweite zu erzielen. Von ABITRON können hierzu ausführliche Informationen bezogen werden. Die Empfangseinheit sollte weiterhin an einem sicheren und gut zugänglichen Ort angebracht werden, um spätere Installations- und Wartungsarbeiten zu erleichtern. Installieren Sie die Empfangseinheit so, dass die Kabelverbindung nach unten gerichtet ist. Bei Installationen an fahrbaren Maschinen oder Fahrzeugen müssen Gummipuffer angebracht werden, die verhindern, dass starke Vibrationen von der Maschine auf die Empfangseinheit übertragen werden. Bei der Montage der Gummipuffer ist unbedingt das Anzugsdrehmoment von 2 Nm zu beachten. Ebenso ist der Gummipuffer gegen selbstständiges Lösen zu sichern. Falls diese nicht bereits als Serienartikel zu Ihrer Funkfernsteuerung mitgeliefert werden, können die Gummipuffer bei Ihrem Händler direkt bestellt werden.

ACHTUNG!

- **Nur eine befähigte Person, die sowohl den Stromkreis der Maschine als auch die technischen Eigenschaften der Funkfernsteuerung kennt, darf die Empfangseinheit einer Funkfernsteuerung an das elektrische System der Maschine anschließen.**
- **Während aller Installationsarbeiten müssen sowohl Sender als auch Empfänger stromlos sein.**
- **Alle Vorschriften, die die Gesundheit der im Umkreis der Installation anwesenden Personen betreffen, alle geltenden örtlichen Bestimmungen und Brandschutzbestimmungen sind strikt einzuhalten.**
- **ABITRON übernimmt keine Haftung oder Garantie für Personen- oder Sachschäden, die durch unsachgemäßen oder fahrlässigen Gebrauch der Funkfernsteuerung oder auf Grund eines Nichtbeachtens der Vorschriften oder Arbeitsanweisungen verursacht wurden.**

4.2 Installation der Ausgangsverdrahtung

Schalten Sie die zu steuernde Maschine stromlos, bevor Sie die Spannungsversorgung des Empfängers anschließen.

Beauftragen Sie eine qualifizierte Fachkraft mit der Verdrahtung. Unsachgemäße Verdrahtung kann ernsthafte Systemschäden verursachen und zum Verlust der Garantie führen. Die Ausgangsverdrahtung muss nach dem Schaltplan der Maschine und der Funkfernsteuerung installiert werden. Verwenden Sie nur Kontakte von guter Qualität, um einen einwandfreien elektrischen Kontakt sicherzustellen. Detaillierte Informationen bezüglich der Empfängerverdrahtung finden Sie innerhalb der Abdeckung des Empfängers.
Die Stromversorgung und das Erdungskabel sind äußerst wichtig. Sie müssen an betriebssichere Stromanschlüsse angeschlossen werden.

4.3 Korrekte Montage der Empfangseinheit

(Siehe Modellzeichnung unten)

Achten Sie beim Positionieren der Empfangseinheit darauf, dass keine großen metallischen Flächen die Außenantenne abschirmen.

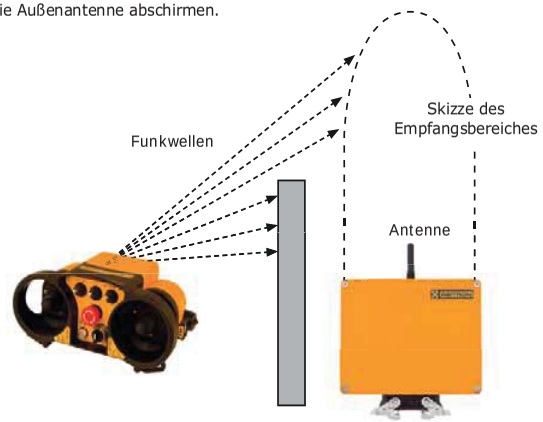

duma rent
www.duma-rent.com

4. Installation

4.4 Antennen-Montage

Wichtig!
Um einen bestmöglichen Betrieb zu gewährleisten, folgen Sie dieser Antennen-Montageanleitung!

Generell:
- Es dürfen nur von ABITRON freigegebene Antennen verwendet werden.
- Sender sowie Empfänger dürfen nicht ohne Antenne betrieben werden.

Für Rückmeldeanlagen:
- Abstand zwischen der Sender- und Empfängerantenne von mindestens 1-2 m einhalten.
- Empfängerantenne waagrecht montieren, Senderantenne senkrecht.

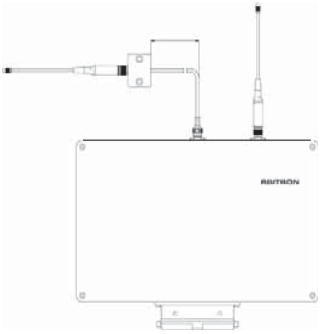

Montagehinweis für Richtfunkantennen am Obendreherkran:

Die Befestigung der Richtfunkantenne ist am Gegenausleger des Kranes vorzunehmen. Der Einbauort sollte offen zugänglich sein und nicht durch Teile des Krans verdeckt werden. Die Antenne muss stets nach unten zeigend (Halterungsbügel oben) montiert werden und die 3 parallel angeordneten Strahlenelemente müssen einen 90° Winkel mit dem Ausleger bilden (siehe Abbildung).

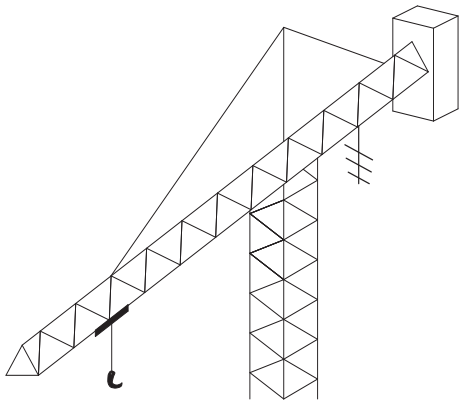

4.5 Kennzeichnung

Ist für den Bediener nicht klar ersichtlich welche Maschine oder welches Maschinenteil die Sendeeinheit steuert, ist dies durch den Maschinenhersteller oder gegebenenfalls auch durch den Maschinenbetreiber eindeutig zu kennzeichnen.

5. Kontrolle vor der Inbetriebnahme

5.1 Hinweis zur Bedienung

Haben Sie die Bedienungsanleitung, insbesondere Kapitel 2 „Sicherheitsmaßnahmen“ und Kapitel 3 „Sicherheitseinrichtungen“, gelesen und verstanden? Sie dürfen das Gerät vorher nicht bedienen!

5.2 Sichtkontrollen

ACHTUNG!
Kontrollieren Sie vor jedem Arbeitseinsatz, ob der Sender Schäden aufweist!

- Befinden sich alle Sicherheitseinrichtungen am richtigen Platz und sind diese funktionstüchtig?
- Sind eventuell Teile beschädigt?
- Ist jeder Gummischutz und jede Abdeckung intakt? (**Sender**)
- Sind alle Verbindungsstecker und Kabel in Ordnung? (**Empfänger**)

ACHTUNG!
Arbeiten Sie nie mit einer Funkfernsteuerung, die Mängel aufweist! Vor Arbeitsbeginn müssen alle Mängel durch eine kompetente Fachkraft behoben werden!

5.3 Vor der Inbetriebnahme

- Stellen Sie sicher, dass das System vollständig montiert wurde.
- Machen Sie sich mit sämtlichen Sicherheitsvorkehrungen in der Bedienungsanleitung vertraut.
- Beachten Sie alle Sicherheitsvorkehrungen in der Bedienungsanleitung und überprüfen Sie die Steuerfunktionen und den Betrieb von Maschine und Funkfernsteuerung.
- Wenn der Sender nicht in Benutzung ist, schalten Sie ihn aus und verwahren Sie ihn an einem sicheren Ort. Der Betrieb muss unbefugten Personen unzugänglich gemacht werden.
- Vergewissern Sie sich **immer**, dass die **Stoppfunktion** von Maschine und Funkfernsteuerung einwandfrei funktioniert.
- Wenn die Maschine nicht richtig anspricht, stoppen Sie den Betrieb umgehend. Schalten Sie den Sender aus und entfernen Sie die Batterie. Bitte suchen Sie sofort einen kompetenten Ansprechpartner auf.
- Vor Wartungsarbeiten entnehmen Sie bitte die Batterie des Senders und unterbrechen die Stromzufuhr des Empfängers.
- Wenn Sie Akkus verwenden, stellen Sie sicher, dass sich ein Akku immer im Ladegerät befindet und das Ladegerät immer an einer festen Stromversorgung angeschlossen ist.
- Montage, Einrichtung und Kundendienst dürfen nur von autorisierten Technikern durchgeführt werden.
- Verwenden Sie ausschließlich ABITRON Ersatzteile.

ACHTUNG!
Schalten Sie die Maschine sofort aus, falls sich ein Problem zeigt. Betreiben Sie eine Maschine niemals, wenn der Nothalt nicht einwandfrei funktioniert. Bei Nichtbeachtung dieser Vorschrift besteht Gefahr für Personen und Sachwerte. Das Ausführen von Arbeitsschritten, die dieser Betriebsvorschrift nicht entsprechen, kann zum Entzug der Betriebserlaubnis und zum Verfall Ihrer Garantie führen!

5.4 Funktionstest der Stopptaste

ACHTUNG!
Vor der täglichen Inbetriebnahme der Funkfernsteuerung muss die Kontrolle des Stopptasters durchgeführt werden!

- Stellen Sie sicher, dass der Sender nur mit vollständig geladenen ABITRON Akkus bzw. Alkali-Batterien betrieben wird.
- Stecken Sie den Schlüssel in den Schlüsselschalter am Sender (nur bei Sender mit Schlüsselschalter).
- Sender einschalten wie in Punkt 6.1 bzw. 6.2 beschrieben.
- Überprüfen Sie jetzt, ob der Stopptaster einwandfrei funktioniert. Gehen Sie hierzu wie folgt vor:
  (1) Drücken Sie den Stopptaster auf dem Sender
  (2) Beobachten Sie die Blinkfrequenz der grünen LED
  (3) Bei gedrücktem Stopptaster = schnelle Blinkfrequenz
  (4) Bei entriegeltem Stopptaster = normale Blinkfrequenz
- Funktioniert die Stopptaste, können Sie die Anlage starten.
- Funktioniert die Stopptaste nicht, müssen Sie für eine Überprüfung durch eine befähigte Person sorgen.
- Jetzt ist Ihre Funkfernsteuerung einsatzbereit. Führen Sie nun eine beliebige Funktion mit dem Sender aus und kontrollieren Sie so, ob die Maschine bei Unterbrechung der Funktion ihre Arbeit sofort einstellt.

duma rent
www.duma-rent.com

6. Inbetriebnahme / Betrieb

6.1 Einschaltvorgang für Sender OHNE Schlüsselschalter

1. Akku oder Batterien einlegen.
2. Der Sender wird mit dem grünen Starttaster gestartet (2x betätigen für Systemstart).
3. Sender mit Tip-Betrieb werden mit einem Funktionstaster gestartet.
4. Die grüne LED muss blinken.
5. Wenn die Taste nicht mehr betätigt ist, wird die Bewegung gestoppt.
6. Bei rot blinkender LED muss die Batterie bzw. der Akku gewechselt werden (Unterspannungstest ist optional).

6.2 Einschaltvorgang für Sender MIT Schlüsselschalter

1. Mit dem Schlüsselschalter wird der Sender in Betrieb genommen.
2. Nach dem Einschaltvorgang müssen 2 kurze Signaltöne zu hören sein (Ausnahme ERGO).
3. Nach der Selbstkontrolle blinkt die grüne LED auf dem Sender.
4. Zur täglichen Kontrolle gehört der Test des Stopptasters (wie in Punkt 5.4 beschrieben).
5. Zum Starten der Funkfernsteuerung müssen Sie die grüne Starttaste betätigen. Die Ausführung des Senders kann sich zur Abbildung unterscheiden. Bitte im Plan nachlesen, welche Funktion die Taster haben!
6. Achtung: Steuerfunktionen, welche sich nicht in Nullstellung befinden, verhindern den Startvorgang!

Grüne Starttaste und Schlüsselschalter

Roter Stopptaster

6.3 Statusanzeige im Empfänger

1. Kompakte Ausführung mit Sichtfenster:
   Das LED Fenster befindet sich auf der rechten Seite des Gehäuses.
2. Kompakte Ausführung ohne Sichtfenster:
   Die LEDs sind nur im geöffneten Zustand sichtbar.
3. Modulare Ausführung:
   Auf Decoder und Notstopp-Decoder befinden sich je 3 LEDs.

LED Erklärung:

Gelb	=	Betrieb
Grün	=	Funkverbindung
Rot	=	Störung
Gelb	=	Normal (Stoppzustand)

6.4 Betrieb mit Kabelsteuerung (optional)

Verfügt Ihre ABITRON Funkfernsteuerung über eine Kabelsteuerung, kann diese alternativ ohne Funksignale und Akku betrieben werden. Dabei wird der Sender vom Empfänger mit Strom versorgt und die Kommunikation zwischen Sender und Empfänger erfolgt über das Kabel.

Folgende Varianten sind optional möglich:

- „2-Draht-Technik" (ohne Rückmeldung):
Hier erfolgt die Kommunikation und die Spannungsversorgung des Senders über das Akkufach. Bei dieser Variante muss die Kabelsteuerung sender- und empfängerseitig immer abgesteckt werden, um einen Funkbetrieb wieder zu ermöglichen.

- „Mehrdraht-Technik" (mit Rückmeldung):
Hier erfolgt die Kommunikation und die Spannungsversorgung des Senders über einen separaten Stecker. Hier reicht es die Kabelsteuerung sender- oder empfängerseitig abzustecken um in den Funkbetrieb zu wechseln.

Die Pol-Zahl und die Stecker-Variante kann je nach Ausführung der Funkfernsteuerung variieren.

ACHTUNG!

Achten Sie bitte im Kabelsteuerungsbetrieb auf die erhöhte Stolpergefahr durch das Steuerungskabel für den Bediener und andere Personen im Maschinenbereich.

7. Bedienung der MFS und HL Systeme

7.1 MFS Übertragungstechnologie (Multi Frequency Sharing)

Bei den Ausführungen POCKET, HAND HELD und ERGO wird das MFSHL System verwendet. MFS-Technologie ermöglicht es, dass mehrere Systeme mit derselben Frequenz im selben Umfeld bedient werden können.

Sender: ERGO MFSHL

POCKET MFSHL

HAND HELD MFSHL

Empfänger: RX AC8 & 16 MFSHL

RX DC8 & 16 MFSHL

Sender	Rote LED	Grüne LED
Unterspannung	An	Blinkend
Fehler	An	An
Normal	Aus	Blinkend
Nothalt	Blinkend	Aus

Empfänger	Rote LED	Grüne LED	Buzzer
Fehler Hauptkontakt	An	Aus	Aus
Aktiv	Aus	Aus	Pfeift
Empfängt	Aus	Blinkend	Aus

7.2 H-Link

H-Link ist eine Technologie, die dem Bediener den Zugriff auf die Konfiguration von ABITRON Funkfernsteuerungen ermöglicht, ohne dass diese geöffnet werden müssen. Die Verdrahtung und Belegung wird durch drahtlosen Datenaustausch zwischen ABITRON Geräten und einem H-Link Konfigurator ersetzt. Mittels H-Link können Funktionen wie z. B. Systemadressen, Senderfrequenzkanäle, automatische Abschaltung, Verriegelung, Ausgangseinstellung und vieles mehr eingestellt werden.

duma rent
www.duma-rent.com

8. Ladegerät- und Akkuhandhabung

8.1 Wechseln und Aufladen der Akkus

Die Akkus müssen vor Inbetriebnahme vollständig geladen werden! Das Ladegerät sowie die Akkus müssen an einem sauberen und trockenen Ort platziert bzw. gelagert werden. Schließen Sie das Ladegerät, entsprechend der Ausführung, an eine unterbrechungsfreie Stromversorgung an. Geben Sie den leeren Akku in das Ladegerät. Der Ladevorgang wird hierdurch gestartet. Unter Punkt 8.2 und 8.3 wird die Anzeige des jeweiligen Ladegerätes genau beschrieben! Alle ABITRON Ladegeräte starten den Ladevorgang nach Einlegen des Akkus automatisch und verfügen über eine Ladezustandserkennung.
Ist der Akku vollständig geladen, wechselt das jeweilige Ladegerät in den Erhaltungsladungsmodus.

TIPP!
Um Ausfallzeiten zu vermeiden, empfiehlt es sich, stets einen geladenen Akku bereitzuhalten.
Um eine Schädigung der Akku-Zellen zu vermeiden empfehlen wir eine Ladetemperatur von 0° C bis +40° C.

Bei **HAND HELD Systemen**, die ein Ladegerät des Typs **VersaPak** benutzen, darf die Batterie auf keinen Fall länger als 24 Stunden geladen werden, um etwaige Schäden an VersaPak-Akkus und Ladegeräten zu vermeiden. Dies gilt ausschließlich für VersaPak-Akkus.
Beauftragen Sie ein Fachunternehmen mit der Verwertung und Entsorgung!

8.2 Anzeigen und Fehlermeldungen des ABITRON Ladegerätes UCH-2

LED-Anzeigen des Ladegerätes:
- Ladevorgang läuft: gelbe LED [1] leuchtet
- Schnellladen: gelbe [1] und rote LED [2] leuchten, nach Betätigung der Schnellladetaste [2]
- Ladevorgang abgeschlossen: grüne LED [3] leuchtet, Erhaltungsladung läuft

Fehlermeldungen des Ladegerätes:
- Keine LED leuchtet: der Akku ist defekt
- Gelbe LED [1] blinkt: Kurzschluss im Akkublock

In beiden Fällen darf der Akku nicht mehr verwendet werden!

8.3 Anzeigen und Fehlermeldungen des ABITRON Ladegerätes BCM-1

LED-Anzeigen des Ladegerätes:
- Ladegerät ist mit Spannung versorgt: gelbe LED [1] leuchtet
- Ladevorgang läuft: grüne LED [2] blinkt
- Ladevorgang abgeschlossen: grüne LED [2] leuchtet, Erhaltungsladung läuft
- Akku defekt: rote LED [3] leuchtet

Fehlererkennungen des Ladegerätes:
- Kurzschluss an den Akkupins
- Überspannung des Akkus
- Unterspannung des Akkus
- Defekte Akkuzellen

Wird durch das Ladegerät ein defekter Akku angezeigt, ist der Akku keinesfalls weiter zu verwenden!

ACHTUNG!
Die ABITRON Ladegeräte sind nicht für den Außenbereich geeignet!
Verwenden Sie ausschließlich ABITRON Akkus! Andernfalls besteht Explosionsgefahr. Austretende chemische Substanzen oder sich lösende Teile können irreparable Schäden verursachen.

HINWEIS!
Akkublöcke gelten als Sondermüll und sind ordnungsgemäß zu entsorgen.
Defekte Akku-Packs können auch direkt über ABITRON entsorgt werden.

9. Batteriehandhabung

9.1 Wechseln der Alkali-Batterien (Größe AA – Mignon)

Die Batteriespannung wird stets vom Sender überwacht. Wenn die Spannung zu gering ist, leuchtet die LED am Sender rot auf und je nach Ausführung ertönt ein Signal. Bitte tauschen Sie die Batterien umgehend aus. Dazu verfahren Sie wie folgt:
- Bringen Sie den Kran oder die Maschine schnellstmöglich in eine sichere Position.
- Drücken Sie den Stopptaster des Senders.
- Entfernen Sie die leeren Batterien wie in den folgenden Abbildungen gezeigt.
- Befolgen Sie die Anleitung zur Inbetriebnahme, um das System wieder zu starten.

9.2 Batteriewechsel beim Modell POCKET

- Schieben Sie den Deckel des Batteriefachs auf der Unterseite des Sender heraus.
- Entnehmen Sie die drei leeren Batterien.
- Legen Sie 3 neue 1,5 V Mignonzellen in das gekennzeichnete Fach.
- Schieben Sie den Deckel wieder auf das Batteriefach.

9.3 Batteriewechsel beim Modell HAND HELD

- Drücken Sie den Hebel am Ende des Batteriefachs, um das Batterierohr oder den Akku zu entfernen.
- Entnehmen Sie die 2 leeren Batterien.
- Legen Sie 2 neue 1,5 V Mignonzellen in das gekennzeichnete Batteriefach.
- Legen Sie das Batterierohr mit der offenen Seite voran in das Batteriefach des Senders.
- Schieben Sie das Batterierohr in das Batteriefach bis es einrastet.

9.4 ABITRON Batteriefach

- Um das Batteriefach zu entnehmen, verfahren Sie wie beim Akkuwechsel.
- Bitte achten Sie auf die Polarität der Batterien +/-.

ACHTUNG!
Verwenden Sie ausschließlich alkalische Batterien!
Alkalische Batterien dürfen nicht im Ladegerät geladen werden!

Halten Sie den Akku fern von leitenden Gegenständen, die eine Überbrückung der Kontakte verursachen könnten. Bei falscher Anwendung kann Flüssigkeit aus dem Akku austreten. Vermeiden Sie Kontakt und beachten Sie die allgemeinen Verhaltensregeln.

duma rent
www.duma-rent.com

10. Diagnose

Problem	Mögliche Ursachen	Problemlösung
Der Sender zeigt beim Einschalten keine Reaktion.	Die Batterie ist leer.	Laden Sie die Batterie oder ersetzen Sie die alkalische Batterie.
	Die Sicherung ist defekt.	Die Sicherung muss durch eine Fachkraft erneuert werden.
	Der Schlüsselschalter ist defekt.	Der Schlüsselschalter muss durch eine Fachkraft erneuert werden.
	Die Batteriekontakte sind verschmutzt.	Bitte reinigen Sie die Batteriekontakte mit einem Tuch.
	Die Federkontakte im Batteriefach sind defekt.	Lassen Sie die Federkontakte von einer Fachkraft erneuern.
Kommunikationsstörungen zwischen Sender und Empfänger.	Die Reichweite wurde überschritten.	Gehen Sie in Richtung des Empfängers.
	Eine Funksteuerung mit der gleichen Frequenz arbeitet in der unmittelbaren Nähe.	Die HF-Einstellung muss durch eine Fachkraft angepasst werden.
	Ein Objekt befindet sich zwischen Sender und Empfänger.	Bitte ändern Sie die Position des Senders oder verändern Sie die Antennenposition mittels einer Verlängerung.
Die Betriebszeit ist zu kurz.	Die Batterie ist leer oder defekt.	Geben Sie die Batterie in das Ladegerät und legen Sie eine geladene Batterie in den Sender ein. Überprüfen Sie die Kontrollanzeigen des Ladegeräts.

Haben Sie noch Fragen?
Bitte nehmen Sie Kontakt mit Ihrem Händler oder mit dem ABITRON Service-Team auf. Wir helfen Ihnen gerne weiter.

10. Diagnose

Problem	Mögliche Ursachen	Problemlösung
Das Funksignal wird empfangen, aber einige vom Sender ausgeführte Funktionen reagieren nicht.	Die Verbindung zwischen der Maschine und dem Empfänger ist unterbrochen.	Möglicherweise haben sich Kabel gelöst. Überprüfen Sie die Verkabelung des Empfängers an der betreffenden Funktion.
	Das Ausgangsmodul ist defekt.	Prüfen Sie, ob auf dem Ausgangsmodul im Empfänger eine LED leuchtet, wenn die entsprechende Funktion aktiviert wird.
Nach normaler Inbetriebnahme lässt sich das System nicht starten.	Der Stopptaster ist gedrückt oder defekt.	Lösen Sie den Stopptaster. Betätigen Sie die Start/Hupe Taste.
	Der Joystick befindet sich nicht in Mittelstellung.	Versichern Sie sich, dass sich alle Joysticks in Mittelstellung befinden.
	Der Akku oder die Batterie des Senders ist leer.	Überprüfen und wechseln Sie gegebenenfalls den Akku oder die Batterien.
	Der Empfänger ist stromlos.	Die gelbe LED (Diagnosefenster) muss blinken. Überprüfen Sie die Sicherungen.
	Der Starttaster ist defekt.	Der Starttaster muss durch eine Fachkraft erneuert werden.

Haben Sie noch Fragen?
Bitte nehmen Sie Kontakt mit Ihrem Händler oder mit dem ABITRON Service-Team auf. Wir helfen Ihnen gerne weiter.

duma rent
www.duma-rent.com

11. Allgemeine technische Daten

11.1 System

Frequenzbereich:	Europa 433/434 MHz und 869 MHz, Sonderfrequenzen auf Anfrage
HF-Synthesizer:	Mikroprozessor gesteuerter PLL Synthesizer mit 32 wählbaren Frequenzen
HF-Leistung:	< 10 mW Standard, höhere Sendeleistung auf Anfrage erhältlich
Modulation:	FM – schmale Bandbreite
Bandbreite:	12,5 kHz / 25 kHz, je nach Ausführung
Reichweite:	bis zu 100 Meter mit Standardantenne, bis zu 200 Meter mit Spezialantenne
Adressierung:	20 Bit (1 Million einzelne Möglichkeiten)
Temperaturbereich:	-25° C bis +70° C (-18° F bis 160° F)
Feuchtigkeitsresistenz:	0 - 97 % Maximum (gilt nicht für Kondensation)
Ansprechungsdauer:	ca. 450 ms
Baudrate:	2400/4800/9600 bps
Diagnose:	Statusanzeige für HF-Kommunikation, Betriebsspannungsanzeigen für Sender und Empfänger, Unterspannungsanzeige
Zertifikate:	CE, TÜV, ISO 9001 u. v. a.
Steuerfunktion:	bis Performance Level »c« nach EN ISO 13849-1:2008 (Abhängig von der technischen Ausführung)
Stoppfunktion:	bis Performance Level »e« nach EN ISO 13849-1:2008 (Abhängig von der technischen Ausführung)

11.2 Sender

Art:	ergonomisch geformtes Gehäuse
Gehäusematerial:	auf Fiberglas basierendes Polyamid mit Glasfaseranteil, je nach Sendervariante, andere Materialien auf Anfrage
IP-Schutzklasse:	IP 65
Antenne:	innenliegend
Batteriegehäuse:	elektrisch getrennt mit vergoldeten, selbstreinigenden Kontakten
Betriebsdauer:	standardmäßig 14 – 20 Stunden, je nach Ausführung unterschiedlich
Drucktaster:	ein- oder zweistufig
Joystick:	alle Joysticks mit automatischer Rückstellung, mehrstufig und proportional, optional mit Totmann, feuchtigkeitsabweisend und ergonomisch im Design
Stromaufnahme:	≤ 150 mA, bei Sonderausführungen bis ≤ 300 mA

11.3 Empfänger

Gehäusematerial:	auf Fiberglas basierendes Polyamid mit 30 % Glasfaseranteil, je nach Empfängervariante, andere Materialien auf Anfrage
Anschlussverbindung:	durch feuchtigkeitsabweisenden Anschlussstecker
IP-Schutzklasse:	IP 65
Betriebsspannung:	12/24 VDC, 48/115/230 VAC
Stromaufnahme:	< 0,8 A, je nach Bauart
Antenne:	Außenantenne, mit feuchtigkeitsabweisender Verbindung, zum Teil innenliegend
Digitale Ausgänge:	fehlersicherer und selbstüberwachender Nothaltkreis. Alle Relaisausgänge 275 VAC / 8 A
Prop. Auflösung:	8 Bit (256 Stufen pro Funktion), eingebaute Rampenfunktion wählbar
Prop. Ausgänge:	PWM-Signal mit wählbarer Dither-Frequenz und Strombereich, lineare Ausgangsspannung, Einstellung der prop. Funktionen über den Sender mit Quick-Set-Eigenschaften oder über Potentiometer, mehrere Geschwindigkeitsbereiche wählbar, alle prop. Funktionen einstellbar mit Anfangs- und Endgeschwindigkeit
Serielle Schnittstellen:	RS232/485, CAN-Open, Profi-Bus-DP, Profi-Net
Absicherung gegen Rückspeisung:	Die Absicherung der proportionalen Ausgänge wird standardmäßig im Kabel eingebaut. Wird das Kabel durch den Kunden angefertigt, muss er für diese Absicherung Sorge tragen.
Schutzklasse:	I, II, III

11.4 Akku und Ladegerät

Betriebsspannung:	10 - 30 VDC oder 100 - 240 VAC
Ladezeit:	< 4 Stunden
Lebensdauer:	≥ 500 Ladungen
Art:	NiMH
Kapazität:	1900 mAh
Kontakte:	vergoldete, selbstreinigende Kontakte
empfohlene Ladetemperatur:	0° C bis +40° C

11.5 Technische Datenblätter

Technische Datenblätter mit weiteren Informationen stehen Ihnen auf der ABITRON Website zum Download zur Verfügung.

11.6 Allgemein

Der Rechtsstand der CE-Erklärung gilt für alle Länder der Europäischen Gemeinschaft.

ACHTUNG!
Der Einsatz des HF-Teils CS434 ist anmelde- und gebührenfrei. Der Sender darf niemals ohne Antenne betrieben werden, da das HF-Modul zerstört werden kann. Die Einstellung der Frequenz wird von ABITRON werksseitig vorgegeben. Wenn Sie Probleme mit der Funkverbindung Ihres Systems haben, benachrichtigen Sie bitte Ihren Händler oder den ABITRON Kundendienst.

duma rent
www.duma-rent.com

12. Wartung, Garantie, Entsorgung

12.1 Wartung

Bitte beachten Sie folgende Hinweise, um stets eine sichere Funkfernsteuerung zu haben:
Jede Funksteuerung muss mindestens einmal im Jahr kontrolliert werden. Das mit der Wartung beauftragte Personal muss sicherstellen, dass die Sender- und die Empfangseinheit während der Kontroll- und Inspektionsarbeiten stromlos geschaltet sind. Eine regelmäßige Wartung durch den Benutzer verlängert die Lebensdauer der Funkfernsteuerung.

Einbau, Einrichtung und Kundendienst dürfen nur von befähigten Personen durchgeführt werden. Eventuelle Reparaturen dürfen nur in anerkannten Reparaturwerkstätten, in von ABITRON empfohlenen Werkstätten oder direkt in den technischen Kundendienst- und Ersatzteilzentren von ABITRON vorgegenommen werden.

Eine eventuelle Benutzung von nicht original Ersatzteilen oder von nicht autorisiertem Personal ausgeführte Arbeiten führen zu sofortigem Erlöschen der Garantie.

ACHTUNG!
Sind eventuell elektrische Kontakte oxidiert, so verwenden Sie kein Anti-Oxidationsmittel oder ähnliches! Wenden Sie sich in diesem Fall zur sofortigen Auswechslung der betroffenen Teile an Ihren Händler. Die Benutzung von chemischen Mitteln in der Funkfernsteuerung verursacht Schäden an den inneren Bauteilen.

12.2 Garantie und Gewährleistung

Die Konditionen bezüglich Garantie und Gewährleistung entnehmen Sie bitte unseren Allgemeinen Geschäftsbedingungen bzw. unseren Liefer- und Zahlungsbedingungen und den Garantiebedingungen.

12.3 Entsorgung

Vermeiden Sie Umweltverschmutzung! Elektronische Geräte und Teile davon sind Problemmüll! Dies gilt besonders für aufladbare Akkupacks! Beauftragen Sie ein Fachunternehmen mit der Verwertung und Entsorgung! Defekte Akkupacks können auch direkt über ABITRON entsorgt werden!

12.4 Befähigte Personen nach Betriebssicherheitsverordnung

Bitte beachten Sie, dass nur befähigte Personen im Sinne der Betriebssicherheitsverordnung mit der richtigen Berufsausbildung, Berufserfahrung und zeitnaher beruflicher Tätigkeit Arbeiten mit der Funkfernbedienung, Wartungsarbeiten und Reparaturen durchführen dürfen.

12.5 Ersatzteile

Verwenden Sie nur ABITRON Ersatzteile. Die Verwendung anderer Ersatzteile kann sich auf die Leistung, die Lebensdauer und die Sicherheit des Systems auswirken und zum Erlöschen der Garantie führen.

ABITRON lehnt alle Haftungsansprüche für Sachschäden, Körperverletzung oder Tod ab, die durch die Verwendung von nicht zugelassenen Ersatzteilen oder unbefugten Service entstehen.

13. Abkürzungen und Begriffserklärungen

13.1 Abkürzungen

AK	Analogkanal
DK	Digitalkanal
EPROM	Elektrisch programmierbarer Festwertspeicher
FM	Frequenzmodulation
GND	Bezugspotential
HF	Hochfrequenz
KHz	Kilohertz
LED	Leuchtdiode
mAh	Milliamperestunden
mA	Milliampere
msec	Millisekunden
MHz	Megahertz
mW	Milliwatt
NiMH	Nickel-Metall-Hydrid
PWM	Pulsweitenmodulation
RF	Funkfrequenz
RX	Empfänger
SMD	Stark minimierte Dimension von Bauteilen
TTL	Transistorenlogik
TX	Sender
UB	Betriebsspannung
VAC	Wechselstrom
VDC	Gleichstrom

13.2 Begriffserklärungen

Akustisches Signal	Summer oder anderer Klang, als Warnsignal
Analoges Signal	Proportional stufenlose Steuerung
Coder	Wandelt Eingangssignale in serielle Datennachrichten um
Decoder	Wandelt serielle Datennachrichten in Ausgangssignale um
Digitalsignal	An/aus Funktion
Rastende Funktion	Die Funktion ist aktiviert, wenn der Schalter in Position „On“ ist. Die Funktion ist nicht mehr aktiviert, wenn der Schalter in Position „Off“ ist
Tastende Funktion	Die Funktion ist solange aktiv, wie der Taster gedrückt bleibt
Proportionale Steuerung	Eine stufenlose Ansteuerung mit verschiedenen Geschwindigkeiten

duma rent
www.duma-rent.com

14. Erklärung zu Einbau- und Sicherheitstest

Dieses Formular ist unbedingt durch den für den Einbau Verantwortlichen zu ergänzen und zu unterzeichnen.

ABITRON kann keine Gewährleistung für die korrekte Installation der Funkfernsteuerung übernehmen. Der Bediener muss sich davon überzeugen, dass Funkfernsteuerung und Maschine aufeinander angepasst und geprüft wurden und die Sicherheitsbestimmungen eingehalten werden. Der Bediener muss alle Sicherheitsvorkehrungen dieser und anderer maßgeblicher Anleitungen befolgen.

Daten der Kundenmaschine

Hersteller

Modellnummer

Seriennummer

Produktionsjahr

Daten der Funkfernsteuerung

Hersteller

Modell

Typ

Systemnummer

Ich/ Wir habe(n) den Einbau, die Inbetriebnahme und die Sicherheitsprüfung der Funkfernsteuerung an der oben genannten Maschine durchgeführt. Die geltenden Vorschriften und Gesetze für die Maschinenart wurden dabei erfüllt.

Ort, Datum

Firma (Anschrift) / Stempel

Name des Verantwortlichen Unterschrift

General Operating Manual

Page

1. Introduction 23
- 1.1 Operating Manual
- 1.2 How to use this Manual
- 1.3 Production and System Numbers

2. Safety Precautions 24
- 2.1 Safety of this Radio Remote Control System
- 2.2 Safety Information
- 2.3 Authorized Operators
- 2.4 Sources of Risk
- 2.5 Safety Precautions in the Working Area
- 2.6 Protection Devices
- 2.7 In Case of Emergency

3. Protection Devices 25
- 3.1 Transmitter
- 3.2 Receiver
- 3.3 System

4. Installation 26
- 4.1 Positioning of the Receiver Unit
- 4.2 Installation of the Output Wiring
- 4.3 Proper Installation of the Receiver Unit
- 4.4 Mounting Antennas
- 4.5 Identification

5. Check before Operation 28
- 5.1 Note for Operation
- 5.2 Visual Inspection
- 5.3 Prior to Operation
- 5.4 Functional Test of the Stop Button

6. Startup Procedure 29
- 6.1 Startup Procedure for Transmitters WITHOUT Key Switch
- 6.2 Startup Procedure for Transmitters WITH Key Switch
- 6.3 Receiver Status Display
- 6.4 Operation with Cable Control

7. Operation of MFS and HL Systems 30
- 7.1 MFS Transmission Technology
- 7.2 H-Link

Page

8. Battery Charger and Rechargeable Batteries 31
- 8.1 Replacing and Charging Rechargeable Batteries
- 8.2 Display and Error Messages of the ABITRON Battery Charger UCH-2
- 8.3 Display and Error Messages of the ABITRON Battery Charger BCM-1

9. Battery Handling 32
- 9.1 Replacing Alcaline Batteries (Size AA - Round Cell)
- 9.2 Battery Replacement for Type POCKET
- 9.3 Battery Replacement for Type HAND HELD
- 9.4 ABITRON Battery Compartment

10. Diagnostics 33

11. General Technical Data 35
- 11.1 System
- 11.2 Transmitter
- 11.3 Receiver
- 11.4 Rechargeable Battery and Battery Charger
- 11.5 Technical Data Sheets
- 11.6 General

12. Maintenance, Guarantee, Disposal 37
- 12.1 Maintenance
- 12.2 Guarantee and Warranty
- 12.3 Disposal
- 12.4 Qualified Persons according to the Ordinance on Industrial Safety and Health
- 12.5 Spare Parts

13. Abbreviations and Definitions 38
- 13.1 Abbreviations
- 13.2 Definitions

14. Installation and Safety Test Declaration 39

duma rent
www.duma-rent.com

1. Introduction

1.1 Operating Manual

We are glad that you have chosen an ABITRON quality product. Our safety radio remote control systems offer maximum quality, reliability and innovation.

Do you want to know more about ABITRON?

Just visit our website!

Read the manual of all system components carefully in full before operating the system. The content will make yourself familiar with the safety instructions and the controls during standard operation and maintenance. Keep the manual in a place where the operator can access it at any time.

1.2 How to use this Manual

- This manual is part of the product.
- This manual has to be retained as long as the system is operated.
- This manual has to be passed on to every future owner or user of the system.
- Please assure, that each available appendix is attached to the manual, f.e. technical data sheet.

1.3 Production and System Numbers

When you contact your dealer or partner for repair work, maintenance or spare parts, please keep the system numbers of the transmitter and the receiver ready. You will find the numbers on the type plate on the outside of the transmitter and receiver housing.

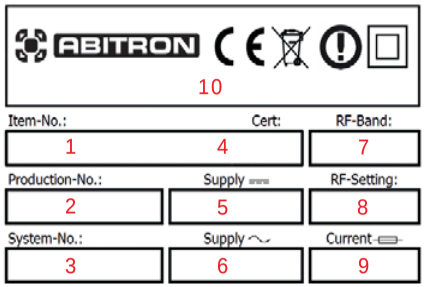

Type Plate – Labeling and meaning

1. Transmitter and receiver type
2. Production number
3. System number
4. Type approval certificate
5. Rated voltage DC
6. Rated voltage AC
7. Frequency range
8. RF-part channel setting
9. Maximum current Iz
10. Company information / approvals

Explanation for Production- & System number

Each production number consists of 12 digits and each system number of 7 digits. Below you will find the meaning of the particular digits from left to right:

1 0814 1000001	Production number
1	Country code
08	Month of production
14	Year of production
1000001	Continous number (AG)
7 000001	Continous number (AA)
1 000001	System number
1	Country code
0 00001	Continous number

		Country code
A	ABITRON Germany (AG)	1
B	ABITRON Austria (AA)	7

f. e. A production number = 108141000001 = produced in Germany, August, 2014, # 1000001
f. e. B production number = 708147000001 = produced in Austria, August, 2014, # 7000001etc.

Please notice the attached drawings and the respective technical data sheets on our website!
The drawings will show the specific version of your radio remote control.

2. Safety Precautions

2.1 Safety of this Radio Remote Control System

This radio remote control system is equipped with both, electronic and mechanical protection devices for the functional safety, fault-free operation and interference resistance. Control commands from other transmitters cannot be processed or transmitted to other receiver units, as all information from the transmitter and the receiver is encoded.

2.2 Safety Information

Using a radio remote control system allows the operator for more mobility in his working area and increased precision. However, the user and the maintenance staff always have to be attentive, in order to access all these advantages. The operator always has to keep an eye on the machine running, as this is necessary to assure a proper and safe operation of the radio remote control system.

2.3 Authorized Operators have to be instructed according to the industrial safety regulations!

Always check the operating instructions of your machine to receive more important information!
The operator has to assure that **unauthorized persons cannot** operate the transmitter. For this, he has to turn off the key switch, remove the key or the rechargeable battery and store the transmitter in a lockable location. This is the only way to prevent undesired use or misuse by unauthorized persons. The operator must have access to all operating instructions, which are necessary for the proper operation of the machine to be controlled. If the system is not used by the buyer himself, if it was lent, rented or sold, please provide this operating manual and the required safety instructions before operation.

Before operating this radio remote control, the operator has to read and fully understand all instructions of every chapter of this manual.

2.4 Sources of Risk

The system is designed for permitting machines to be controlled by radio remote control. However, control commands are also transmitted outside your range of vision and through or around obstacles.
Therefore:

- Switch the transmitter off and pull the key from the key switch, if it is not in use.
- Remove the rechargeable battery, if your transmitter does not have a key switch.
- The protection devices may not be modified or removed.
- **ATTENTION! In case of non-compliance, warranty claims according to the Civil Code (ABGB / BGB) and the Commercial Code (UGB / HGB), and the duty of replacement according to the Product Liability Act are excluded.**

2.5 Safety Precautions in the Working Area

Make sure, that there are no risks for the operator within the working area of the radio remote control. Ensure, that there are no obstacles in the working area and that dangerous situations, affecting the operational safety, are avoided. Make sure, you position yourself securely. Before each use of the radio remote control system, ensure, that nobody is within the working area or the swiveling range of your load. If a carrying strap is provided for your transmitter, this has to be used.

2.6 Protection Devices

All industrial ABITRON radio remote control systems are equipped with an emergency stop button, located on the control panel of the transmitter.

The radio remote control system is provided with protection devices, which are activated automatically in the following cases:

- Radio interference within the working area, affecting the frequency range of the ABITRON radio remote control.
- Exceeding the range of the transmitter.

In these cases, the radio remote control will be stopped immediately and the output signals of the receiver are interrupted.

2.7 In Case of Emergency

1 Press the red stop button.
2 Turn the key switch to position „OFF".
3 Wait until the machine has stopped.
4 Proceed as instructed in the operating manual for your machine.

Unlock stop button by turning clockwise

Unlock stop button by turning clockwise

Push-pull-stop

duma rent
www.duma-rent.com

3. Protection Devices

3.1 Transmitter

Key switch:
Almost all ABITRON transmitters are equipped with a key switch. This key enables the operator to switch off the transmitter, when it is not in use. Furthermore, the key switch prevents undesired use or misuse by unauthorized persons and is a helpful device in case of maintenance work on the machine.

Self test:
After turning the key switch, the system performs a self test. 2 acoustic signals will confirm a positive test result. When the green LED is flashing the transmitter is ready for operation.

Button „start/horn" – neutral position:
After the self test, the transmitter has to be started by pushing the start/horn button. This will activate the receiver. All control functions have to be in neutral position, in order to start the system. If one of the control functions is activated, the system cannot be started. This protective measurement ensures that machine motions cannot be activated accidentally. You cannot skip the start button by destructing it or shutting it down. If the start button is pushed during the self test, the system will not start.

Stop button:
The transmitters are equipped with a tamper-proof stop button. The stop signal is transmitted as a digital signal. Furthermore the stop button status is monitored during the self test when the system is started. If the stop button is activated during the startup procedure, the system will not operate.

Battery monitoring:
The transmitter's electronics permanently monitor the battery status. If the battery voltage is low, an optical or acoustic signal for about 30 seconds will alert the operator. Then the transmitter automatically sends out a stop signal and brings the machine into a safe state. Please note that advanced low voltage indication (approx. 10 minutes) is also available.

Mechanical construction:
A mechanical guard on the transmitter protects the buttons and joysticks from shocks and dropping. For this purpose you also use the ergonomically designed carrying devices. The lightweight, fiber-reinforced PVC transmitter housing meets the requirements of daily operation.

3.2 Receiver

Self test:
The software runs a self test after the receiver is powered. If the self test is negative, the receiver will not start and remain in a safe state.

Emergency stop circuit:
The receiver includes a specific emergency stop circuit. Due to the redundant design it functions self-monitoring.

Stop:
When the receiver receives the emergency stop signal from the transmitter:
- the internal power supply to the output modules will shut down.
- a fail-safe, self-monitoring emergency stop output relay will be activated.
The response time for active stop is < 450 ms.

Power supply:
The receiver has its own electronic power supply, which powers all receiver modules.

3.3 System

System number:
Each radio remote control has its own address. It ensures that only the designated transmitter can activate the corresponding receiver.

Radio interference:
In case of radio interference, the system will switch into a safe mode after 450 ms.

Software:
After the startup procedure, the software of the system performs a system test, where all safety devices are checked.

4. Installation

4.1 Positioning of the Receiver Unit

When mounting the receiver, ensure that the antenna has maximum radio reception, in order to have a radio remote control that functions properly. Metal parts of the machine to be controlled in the immediate vicinity of the receiver unit impair a proper radio reception. If the receiver is to be installed inside a metal housing or in a shielded area, an appropriate extension and an adequate antenna have to be used in order to achieve a suitable operating range. Contact ABITRON to get more detailed information. Furthermore the receiver has to be mounted in a safe and easily accessible place, in order to facilitate future installation and maintenance work. Install the receiver unit with the cable connections downwards. If the receiver is to be installed on a vehicle or on a mobile machine, you should equip the receiver with rubber buffers, which prevent the transmission of heavy vibrations from the machine to the receiver. hen mounting the rubber buffers, please pay attention to the tightening torque of 2 Nm. Furthermore, the rubber buffers need to be secured against loosening. If these rubber buffers are not included in your radio remote control system, you may obtain them from your dealer directly.

ATTENTION!

- **The installation of the receiver unit on the electric system of the machine may only be performed by a qualified person, familiar with the electrical circuitry of the machine and the technical features of the radio remote control.**
- **Both, the transmitter and the receiver have to be powered down during installation work.**
- **All instructions, concerning the health of persons within the immediate vicinity of installation, all valid local regulations and fire regulations have to be observed strictly.**
- **ABITRON will not accept liability or provide a guarantee in the event of personal injury or damage to property, resulting from improper or negligent use of the remote control or non-compliance with the regulations or instructions.**

4.2 Installation of the Output Wiring

Switch the power supply of the machine off before attaching the voltage supply of the receiver.

Authorize a qualified technician to perform the wiring. Improper wiring may cause serious system damage and may void your guarantee. The output wiring has to be installed according to the connection diagram of the machine and the radio remote control. Only use contacts of good quality, to ensure a proper electric contact. You will find detailed information about the receiver wiring inside the cover of the receiver.
The power supply and the ground wire are extremely important. They have to be connected to fail-safe electrical connections.

4.3 Proper Installation of the Receiver Unit

(See drawing below)

When mounting the receiver unit ensure that no big metal surfaces shield the external antenna.

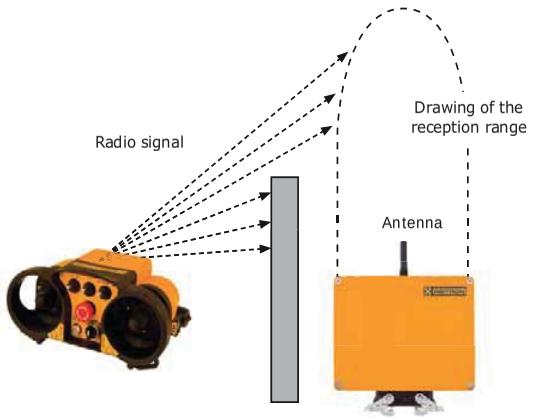

duma rent
www.duma-rent.com

4. Installation

4.4 Mounting Antennas

Important!
To guarantee a optimal operation, follow the instructions given below to mount the antennas.

General:
- Only antennas, that have been approved by ABITRON, may be used.
- Neither the receiver nor the transmitter may be used without antenna.

For Feedback-Systems:
- Keep a minimum distance of 3 to 6 ft. between the receiver antenna and the transmitter antenna.
- Mount the receiver antenna horizontally, the transmitter antenna vertically.

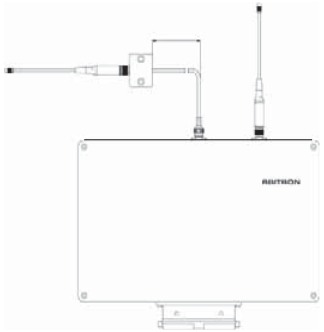

Mounting Instructions for Directional Antenna on Top Slewing Cranes:

The mounting of the directional antenna has to be done on the counter-boom of the crane. The mounting position should be easily accessible from all sides and not be hidden by any components. The antenna has always to be mounted pointing downwards (mounting clip on top) and the radiation elements (3 parallel pieces) have to show a 90° angle to the boom (see illustration).

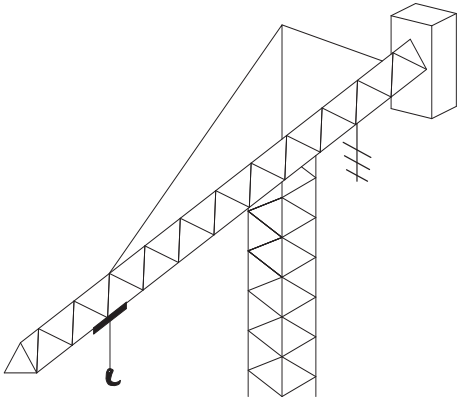

4.5 Identification

If it isn't evident for the operator which machine or machine part is controlled by the transmitting unit, this has to be marked clearly by the machine manufacturer or by the machine operator.

5. Check before Operation

5.1 Note for Operation

Have you read and understood the operating manual, in particular section 2 „Safety precautions" and section 3 „Protection devices"? Please do not use the device until you have done so!

5.2 Visual Inspection

ATTENTION!
Always check the transmitter for damages <u>each time</u> before use!
- Are all protection devices present and fully functional?
- Are there any broken parts?
- Are all rubber sleeves and the pushbutton caps in good order? **(transmitter)**
- Are all connections and cables in good order? **(receiver)**

ATTENTION!
Never operate a radio remote control, that shows any kind defects! All defects have to be repaired by a qualified technician before operation!

5.3 Prior to Operation

- Make sure, the system has been installed completely.
- Make yourself familiar with all safety precautions of the operating manual.
- Notice all safety precautions of the operating manual and check the control functions and the operation of machine and radio remote control.
- If the transmitter is not operated, turn it off and store it in a safe place, inaccessible for unauthorized persons.
- **Always** check that the **stop function** of the machine and the radio remote control work perfectly.
- If the machine does not respond correctly, immediately stop operation. Turn off the transmitter and remove the batteries. Immediately contact a qualified person.
- Remove the batteries of the transmitter and disconnect the power supply of the receiver before any maintenance work is done.
- If you are using rechargeable batteries, make sure that there is always one battery in the charger, and that the charger is always connected to a permanent power supply.
- Installation, adjustment and maintenance may only be performed by authorized technicians.
- Only use original ABITRON spare parts.

ATTENTION!
In case of problems, turn off the machine immediately. Never operate a machine if the emergency stop does not operate properly. In case of disregarding this rule there is risk of personal injury or collateral damage. Performing work steps not complying with this operating manual may lead to the loss of your operating license and result in the expiration of your guarantee!

5.4 Functional Test of the Stop Button

ATTENTION!
Check the emergency stop button each time before operating the radio remote control system!

- Make sure, that the transmitter is either operated with completely charged ABITRON batteries or alcaline batteries.
- Put the key into the key switch on the transmitter. (only for transmitters with key switch)
- Start the transmitter as described in 6.1 or 6.2.
- Now check if the stop button is working properly. Proceed as follows:
  (1) Push the stop button on the transmitter
  (2) Watch the flashing of the green LED
  (3) If stop button is activated = fast flashing
  (4) If stop button is released = standard flashing
- If the stop button works properly – you may start the system.
- If the stop button does not work properly, the system has to be inspected by a qualified person.
- Now your radio remote control is ready for operation. Activate any of the functions using the transmitter and check if the machine operation immediately stops if the function is interrupted.

duma rent
www.duma-rent.com

6. Startup Procedure / Operation

6.1 Startup Procedure for Transmitters WITHOUT Key Switch

1. Insert a battery or rechargeable battery.
2. The transmitter will be started by activating the green start button (press twice for system start).
3. Transmitter with inching operation will be started by activating a function button.
4. The green LED has to flash.
5. If the function button is released, the motion will be stopped.
6. If the red LED is flashing, the battery or the rechargeable battery has to be changed (Low voltage test optionally).

6.2 Startup Procedure for Transmitters WITH Key Switch

1. The key switch is used to start the transmitter.
2. After the startup procedure, you should hear 2 short acoustic signals (exception ERGO).
3. After this self test, the green LED on the transmitter starts flashing.
4. The stop button has to be checked every day (see section 5.4.).
5. Press the green start button in order to start the system. The layout of your transmitter may vary from the pictures below. Please refer to your drawings for information about the function of the buttons.
6. Attention: Control functions which are not in neutral position prevent the startup!

Green start button and key switch

Red stop button

6.3 Receiver Status Display

1. Compact version with vision panel:
   The LED Display is on the right side of the housing.
2. Compact version without vision panel:
   The LEDs are only visible when receiver lid opened.
3. Modular Version:
   There are 3 LEDs on both the decoder and the emergency stop decoder.

LED explanation:

Yellow	=	Operation
Green	=	Radio link
Red	=	Failure
Yellow	=	Normal (stop condition)

6.4 Operation with Cable Control (optional)

If your ABITRON radio remote control has a cable control, it can also be operated without radio signal and battery. The transmitter will be supplied with power from the receiver. The transmitter communicates with the receiver via cable.

There are two available versions:

- „2-wire-technique" (without feedback):

The battery case takes care of the communication and the power supply of the transmitter. With this option, the cable control has to be disconnected from the transmitter and the receiver to enable a radio operation.

- „Multi-wire-technique" (with feedback):

A special plug takes care of the communication and power supply of the transmitter. The cable control only needs to be connected either from the transmitter or the receiver to enable a radio operation.

The number of poles and the plug versions can vary depending on the particular radio remote controls.

ATTENTION!

The risk of tripping for the operator and other persons in the machine area is increased risk during cable control operation because of the control cable.

7. Operation of MFS and HL Systems

7.1 MFS Transmission Technology (Multi Frequency Sharing)

POCKET, HAND HELD and ERGO are also available as MFSHL versions. MFS technology allows the operation of serveral systems with the same frequency in the immediate vicinity.

Transmitter: ERGO MFSHL

POCKET MFSHL

HAND HELD MFSHL

Receiver: RX AC8 & 16 MFSHL

RX DC8 & 16 MFSHL

Transmitter	Red LED	Green LED
Low voltage	On	Flashing
Failure	On	On
Normal	On	Flashing
Emergency stop	Flashing	On

Receiver	Red LED	Green LED	Buzzer
Failure main contact	On	Off	Off
Activated	Off	Off	Sounding
Receiving	Off	Flashing	Off

7.2 H-Link

H-Link is a technology, which enables the operator to access the configuration of an ABITRON radio remote control system, without opening it. The wiring and assignment is replaced by a wireless data exchange between ABITRON systems and an H-Link configurator.
Via H-Link you may set functions such as system address, transmitter frequency channel, automatic shut-down, interlocking, output adjustment and many more.

duma rent
www.duma-rent.com

8. Battery Charger and Rechargeable Batteries

8.1 Replacing and Charging Rechargeable Batteries

The batteries have to be fully charged before startup! The charger and battery have to be placed and stored in a clean and dry location. Connect the charger, depending on the type, to a permanent power supply.
Insert the empty battery into the charger and the charging process will start automatically.
The display of the respective charger is described in section 8.2 and 8.3!

All ABITRON battery charger will start automatically the charging process after inserting the battery and have a state detection of the battery.
When the batteries are fully charged, the battery charger automatically switches over to trickle charging.

NOTE!
In order to avoid downtimes, we recommend to always have a fully charged battery pack ready.
In order to avoid damages of the battery cells, we recommend a charging temperature of 0° C up to +40° C.

With **Hand Held systems**, using a charger of the type **VersaPak**, the battery may not be charged longer than 24 hours, in order to avoid damages to the VersaPak batteries and the charger. This applies only for VersaPak batteries. Assign a specialist disposal company with the recycling and disposal!

8.2 Display and Error Messages of the ABITRON Battery Charger UCH-2

LED-Display of the battery charger:
- Charging process is running: yellow LED [1] flashing
- Fast charging: yellow [1] and red [2] LED flashing, after activation of the fast charge button [2]
- Charging process completed: green LED flashing [3], trickle charging is running

Error messages of the battery charger:
- No LED is flashing: rechargeable battery is damaged
- Yellow LED [1] is blinking: short circuit in the battery block

In both cases the battery may no longer be used!

8.3 Display and Error Messages of the ABITRON Battery Charger BCM-1

LED-Display of the battery charger:
- Battery charger power on: yellow LED [1] flashing
- Charging process is running: green LED [2] flashing
- Charging process completed: green LED [2] flashing, trickle charging is running
- Battery is damaged: red LED [3] flashing

Error messages of the battery charger:
- Short circuit at the battery pins
- Overvoltage of the battery
- Undervoltage of the battery
- Damaged batteries

If the battery charger show a damaged battery, the battery may no longer be used!

ATTENTION!
The ABITRON chargers are not suitable for exterior use!
Only use original ABITRON batteries! Failure to observe may result in explosion hazard.
Escaping chemicals and flying parts may cause irreparable damages.

NOTE!
Rechargeable battery packs are to be treated as hazardous waste and have to be disposed properly.
Defective rechargeable battery packs can also be disposed directly through ABITRON.

9. Battery Handling

9.1 Replacing Alcaline Batteries (Size AA – Round Cell)

The battery voltage is constantly monitored by the transmitter. If the voltage is low, the red LED on the transmitter starts flashing and according to the type you will also hear an acoustic signal. Replace the batteries immediately. Proceed as follows:
- Bring the crane or the machine to a safe state as quickly as possible.
- Push the stop button on the transmitter.
- Remove the empty batteries as shown on the following pictures.
- Follow the instructions in section 6 „Startup procedure" to restart the system.

9.2 Battery Replacement for Type POCKET

- Open the battery compartment on the lower side of the transmitter by pulling the cover off.
- Remove the 3 empty batteries.
- Insert 3 new 1.5 V round cells into the marked compartment.
- Close the battery compartment with the cover.

9.3 Battery Replacement for Type HAND HELD

- Push the lever at the end of the battery compartment, until the battery tube or the rechargeable battery releases.
- Remove the 2 empty batteries.
- Insert 2 new 1.5 V round cells into the battery tube.
- Insert the battery tube with the open side forwards into the battery compartment of the transmitter.
- Press the battery tube into the compartment until it fully locks into place.

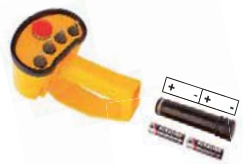

9.4 ABITRON Battery Compartment

- Proceed as described in section 8 „Battery charger and rechargeable batteries", to remove the battery compartment.
- Please note the polarity of the batteries +/-.

ATTENTION!
Only use alcaline batteries!
Alcaline batteries may not be charged in the battery charger!

Keep the battery away from conductive items, that may cause a bridging of the contacts. In case of inproper use, liquid may leak from the battery. Avoid any contact and regard the general rule of conduct.

duma rent
www.duma-rent.com

10. Diagnostics

Problem	Possible Cause	Solution
The transmitter does not respond when it is switched on.	The battery is empty.	Charge the batteries or replace the alcaline batteries.
	The fuse is blown.	The fuse has to be replaced by an authorized expert.
	The key switch is broken.	The key switch has to be replaced by an authorized expert.
	The battery contacts are soiled.	Please clean the battery contacts using a cloth.
	The spring contacts of the battery compartment are broken.	The spring contacts have to be replaced by an autorized expert.
Communication failure between transmitter and receiver.	The range has been exceeded.	Move towards the receiver.
	A radio remote control with the same frequency is operated in close proximity.	The RF settings have to be adjusted by an authorized expert.
	There is an object between transmitter and receiver.	Please change the position of the transmitter or modify the antenna position by using an antenna extension.
The operation time is short.	The battery is empty or broken.	Charge the battery and insert a fully charged battery into the transmitter. Check the LED display of the charger.

Do you have any questions?
Please contact your dealer or our ABITRON service team. We are here to help you.

10. Diagnostics

Problem	Possible Cause	Solution
The radio signal is good, but some of the activated functions do not work.	The connection between the machine and the receiver is broken.	Perhaps there are some cables loose. Check the receiver wiring on the respective function for loose wires.
	The output module is defective.	Check if there is a LED flashing on the receiver output module when the respective function is activated.
The system does not start after standard startup.	The stop button is engaged or broken.	Release the stop button. Activate the start/horn switch.
	A joystick is not in neutral position.	Ensure that all joysticks are in neutral position.
	The battery of the transmitter is empty.	Check the batteries and replace if necessary.
	The receiver is currentless.	The yellow LED (diagnostic display) has to flash. Check the fuses.
	The start button is broken.	The start button has to be replaced by an authorized expert.

Do you have any questions?
Please contact your dealer or our ABITRON service team. We are here to help you.

duma rent
www.duma-rent.com

11.1 System

Frequency range:	Europe 433/434 MHz and 869 MHz, other frequencies upon request
RF synthesizer:	microprocessor-controlled PLL synthesizer with 32 selectable frequencies
RF-output:	< 10 mW standard, increased transmitting power available on demand
Modulation:	FM – narrow bandwidth
Bandwidth:	12.5 kHz, according to the system
Range:	up to 100 meters with standard antenna, up to 200 meters with special antenna
Addressing:	20 bit (more than 1 million different possibilities)
Temperature range:	-25° C up to +70° C (-18° F up to 160° F)
Resistance to moisture:	0 - 97 % max. (non-condensing)
Response time:	approx. 450 ms
Baud rate:	2400/4800/9600 bps
Diagnosis:	status displays for RF communication, operating voltage displays for transmitter and receiver, low battery indication
Certificates:	CE, TÜV, ISO 9001 and many more
Control function:	up to performance Level »c« according to EN ISO 13849-1:2008 (depending on the technical version)
Stop function:	up to performance Level »e« according to EN ISO 13849-1:2008 (depending on the technical version)

11.2 Transmitter

Type:	ergonomically designed housing
Housing material:	fiber-enforced polyamide with glass fibre rate, according to the transmitter type, other materials available on demand
Protection class:	IP 65
Antenna:	internal
Battery housing:	electrically separated, with gold-plated, self-cleaning contacts
Operating time:	14 – 20 hours standard, depending on the system
Push-buttons:	single or two-step
Joysticks:	all joysticks with automatic reset function, multiple-steps and proportional, deadman button optional, moisture repellent and ergonomically designed
Current consumption:	≤ 150 mA, for special equipment uo to ≤ 300 mA

11.3 Receiver

Housing material:	fiber-enforced polyamid with 30 % glass fibre rate, according to receiver type, other materials available on demand
Connection:	via moisture repellent connecting plug
Protection class:	IP 65
Operating voltage:	12/24 VDC, 48/115/230 VAC
Current consumption:	< 0.8 A, type dependant
Antenna:	external antenna, with moisture repellent connection, partly internal
Digital outputs:	fail-safe and self-monitoring emergency stop circuit, all relay outputs 275VAC/8A
Prop. resolution:	8 Bit (256 steps per function), built-in ramp function selectable
Prop. outputs:	PWM signal with selectable dither frequency and current range, linear output voltage, setting of proportional functions via the transmitter (Quick set) or via potentiometer, multiple speed ranges selectable, all proportional functions may be set with initial and final speeds
Serial interfaces:	RS232/485, CAN-Open, Profi-Bus-DP, Profi-Net
Protection against energy recovery:	The protection of the proportional outputs is included in the cable by default. If the cable is made by the customer himself, he has to assure that this protection is available
Protection class:	I, II, III

11.4 Rechargeable Battery and Battery Charger

Operating voltage:	10 - 30 VDC or 100 - 240 VAC
Charging time:	< 4 hours
Service life:	≥ 500 charges
Type:	NiMH
Capacity:	1900 mAh
Contacts:	gold-plated, self-cleaning contacts
Recommended charging temperature:	0° C up to +40° C

11.5 Technical Data Sheets

Technical data sheets with further information are available on the ABITRON website.

11.6 General

The legal status of the EC Declaration is valid for all member states of the European community.

ATTENTION!
The use of the CS434 RF module is not subject to registration or payment of a fee. Never operate the transmitter without an antenna, as this may destroy the RF module. The frequency is preset by ABITRON in the factory. In case of radio link problems with your system, please contact your dealer or the ABITRON after sales service.

duma rent
www.duma-rent.com

12. Maintenance, Guarantee, Disposal

12.1 Maintenance

In order to always have a safe radio remote control please note the following information:
Each radio remote control has to be inspected on a regular basis, at least once a year. The maintenance staff has to ensure that power to the transmitter and the receiver is shut off during maintenance and inspection work. A preventive maintenance by the operator on a regular basis will make for an extended service life.

Installation, adjustment and service work may only be performed by qualified personnel.
Possible repairs may only be performed in service stations that are authorized or recommended by ABITRON or directly in ABITRON's service and spare parts department.

The use of non-original spare parts or the assignment of unauthorized personnel will immediately void your guarantee.

ATTENTION!
In case of oxidized electric contacts, do not use antioxidant or similar! Please contact your dealer for the immediate replacement of the affected parts. The use of chemical agents will cause damage on the internal components of the radio remote control.

12.2 Guarantee and Warranty

The guarantee and warranty conditions are listed in the General Terms and Conditions for Delivery and Payment.

12.3 Disposal

Avoid the pollution of the environment! Electronic devices and their components are hazardous waste! This applies particularly to rechargeable battery packs! Charge a specialist disposal company with the recycling and disposal! Defective rechargeable battery packs may also be disposed of directly through ABITRON!

12.4 Qualified Persons according to the Ordinance on Industrial Safety and Health

Please note that operation, maintenance and repair work may only be performed by qualified persons according to the ordinance on industrial safety and health, with an adequate professional education, work experience and contemporary occupational activity.

12.5 Spare Parts

Only use ABITRON spare parts. The use of other spare parts may affect the performance, the durability and the safety of the system and result in the expiration of the warranty.
ABITRON excludes all liability claims for material damages, personnel injury or death, which result from the use of unauthorized spare parts or services.

13. Abbreviations and Definitions

13.1 Abbreviations

AK	Analog channel
DK	Digital channel
EPROM	Electrical programmable read-only memory
FM	Frequency modulation
GND	Ground
HF	High frequency
KHz	Kilohertz
LED	Light emitting diode
mAh	Milliampere hours
mA	Milliampere
msec	Millisecond
MHz	Megahertz
mW	Milliwatt
NiMH	Nickel metal hydride
PWM	Pulse width modulation
RF	Radio frequency
RX	Receiver
SMD	Surface mounted device
TTL	Transistor logic
TX	Transmitter
UB	Operating power
VAC	Volts alternating current
VDC	Volts direct current

13.2 Definitions

Acoustic signal	Buzzer or other sound, warning signal
Analog signal	Proportional stepless control
Coder	Converts input signals into serial data
Decoder	Converts serial data into output signals
Digital signal	On/off function
Maintained control	The function is activated, if the control is in position „on". If the control is released, it goes bach to position „off" and the function stops.
Momentary control	The function is activated as long as the button is pushed
Proportional control	A functional control with multiple speed, stepless activation

duma rent
www.duma-rent.com

14. Installation and Safety Test Declaration

This form must be completed and signed by the person responsible for the installation of the system.

ABITRON will not accept liability for the correctness of the installation of the radio remote control system. The operator has to assure, that the radio remote control and the machine have been adapted and tested, and that all relevant safety precautions are maintained. The operator has to follow all safety precautions of this manual and other relevant instructions.

Machine Data	**Data of the Radio Remote Control**
Manufacturer	Manufacturer
Type number	Model
Serial number	Type
Production year	System number

I/We have carried out the installation, startup and safety checks for the radio remote control system on the above mentioned machine. In doing so, the latest standards and regulations, applicable to this type of machine, have been maintained.

Location, date

Company (address) / stamp

Name of responsible person Signature

CE Konformitätserklärung

Hiermit bestätigen wir, dass die nachfolgend aufgeführten Maschinenbauteile für den Einbau in Maschinen oder andere Geräte, die für Maschinen bestimmt sind oder nicht, gemäß folgenden EU-Richtlinien mit Änderungen und Fortschreibungen geeignet sind:

Maschinenrichtlinie	2006/42/EG
Niederspannungsrichtlinie	2006/95/EG
EMV-Richtlinie	2004/108/EG
R&TTE Richtlinie	1999/5/EG
Hersteller:	ABITRON Austria GmbH Wiesnerstraße 20 4950 Altheim
Gegenstand der Erklärung:	**Fernsteuerung GA 609[1] / 610[2] / 611[3]**
Sender Typ:	**EURO..., GL..., GR..., NOVA..., ERGO..., HH..., MINI..., POCKET..., FE...**
Empfänger Typ:	**RX..., RX BMS-1 / -2[4]..., RX MFS..., RX 14 / +[5]...**

Der Gegenstand der oben beschriebenen Erklärung entspricht den Anforderungen der folgenden Dokumente:

EN ISO 13849-1	2008	EN 60950-1	2006
EN 62061	2005	EN 61000-6-2	2005
EN 13557	2008	EN 61000-6-4	2007
EN 14492	2009	EN 300 220	2007
EN 60204-32	2008	EN 301 489	2002
EN 60529	1991		

Dokumentationsbevollmächtigter: Mathias Friedl
Wiesnerstraße 20
4950 Altheim

Sicherheitskategorie, Performance Level, SIL Level und zusätzliche Hinweise siehe Deckblatt.

Benannte Stelle: TÜV NORD CERT GmbH, Langemarktstr. 20, 45141 Essen
EG Baumusterprüfbescheinigungen
Nr. 4420513146703[1]
Nr. 4420513146704[2]
Nr. 4420513146705[3]
Nr. 4420513146701[4]
Nr. 4420513146702[5]

Altheim, am 24. Oktober 2014

i. A. Max Köhler

Max Köhler
Konstruktionsleiter

ABITRON

duma rent
www.duma-rent.com

EC Declaration of Conformity

We hereby declare that the components of the equipment, specified below, are suitable for the installation on machinery or other devices, designed for machinery or not, according to the following EU Directives with revisions and subsequent amendments:

Machinery Directive	2006/42/EC
Low Voltage Directive	2006/95/EC
EMC-Directive	2004/108/EC
R&TTE Directive	1999/5/EC
Manufacturer:	ABITRON Austria GmbH Wiesnerstraße 20 4950 Altheim
Object of declaration:	**Remote Control GA 609[1] / 610[2] / 611[3]**
Transmitter Type:	**EURO..., GL..., GR..., NOVA..., ERGO..., HH..., MINI..., POCKET..., FE...**
Receiver Type:	**RX..., RX BMS-1 / -2[4]..., RX MFS..., RX 14 / +[5]...**

The object declaration described above is in conformity with the requirements of the following documents:

EN ISO 13849-1	2008	EN 60950-1	2006
EN 62061	2005	EN 61000-6-2	2005
EN 13557	2008	EN 61000-6-4	2007
EN 14492	2009	EN 300 220	2007
EN 60204-32	2008	EN 301 489	2002
EN 60529	1991		

Authorized for the documentation: Mathias Friedl
Wiesnerstraße 20
4950 Altheim

Safety Category, Performance Level, SIL Level and additional information see Cover Sheet.

Notified Body: TÜV NORD CERT GmbH, Langemarktstr. 20, 45141 Essen
Type approval certificate
Nr. 4420513146703[1]
Nr. 4420513146704[2]
Nr. 4420513146705[3]
Nr. 4420513146701[4]
Nr. 4420513146702[5]

Altheim, 24 Ocotber 2014

Max Köhler
Head of Design Department

CE Konformitätserklärung

Hiermit bestätigen wir, dass die nachfolgend aufgeführten Maschinenbauteile für den Einbau in Maschinen oder andere Geräte, die für Maschinen bestimmt sind oder nicht, gemäß folgenden EU-Richtlinien mit Änderungen und Fortschreibungen geeignet sind:

Maschinenrichtlinie	2006/42/EG
Niederspannungsrichtlinie	2006/95/EG
EMV-Richtlinie	2004/108/EG
R&TTE Richtlinie	1999/5/EG
Hersteller:	ABITRON Germany GmbH Adalbert-Stifter-Str. 2 84085 Langquaid
Gegenstand der Erklärung:	**Fernsteuerung GA 609[1] / 610[2] / 611[3]**
Sender Typ:	**EURO..., GL..., GR..., NOVA..., ERGO..., HH..., MINI..., POCKET..., FE...**
Empfänger Typ:	**RX..., RX BMS-1 / -2[4]..., RX MFS..., RX 14 / +[5]...**

Der Gegenstand der oben beschriebenen Erklärung entspricht den Anforderungen der folgenden Dokumente:

EN ISO 13849-1	2008	EN 60950-1	2006
EN 62061	2005	EN 61000-6-2	2005
EN 13557	2008	EN 61000-6-4	2007
EN 14492	2009	EN 300 220	2007
EN 60204-32	2008	EN 301 489	2002
EN 60529	1991		

Dokumentationsbevollmächtigter: Mathias Friedl
Wiesnerstraße 20
4950 Altheim

Sicherheitskategorie, Performance Level, SIL Level und zusätzliche Hinweise siehe Deckblatt.

Benannte Stelle: TÜV NORD CERT GmbH, Langemarktstr. 20, 45141 Essen
EG Baumusterprüfbescheinigungen
Nr. 4420513146703[1]
Nr. 4420513146704[2]
Nr. 4420513146705[3]
Nr. 4420513146701[4]
Nr. 4420513146702[5]

Langquaid, am 24. Oktober 2014

Daniela Hammerer
Geschäftsführer

duma rent
www.duma-rent.com

EC Declaration of Conformity

We hereby declare that the components of the equipment, specified below, are suitable for the installation on machinery or other devices, designed for machinery or not, according to the following EU Directives with revisions and subsequent amendments:

Machinery Directive	2006/42/EC
Low Voltage Directive	2006/95/EC
EMC-Directive	2004/108/EC
R&TTE Directive	1999/5/EC
Manufacturer:	ABITRON Germany GmbH Adalbert-Stifter-Str. 2 84085 Langquaid
Object of declaration:	**Remote Control GA 609[1] / 610[2] / 611[3]**
Transmitter Type:	**EURO..., GL..., GR..., NOVA..., ERGO..., HH..., MINI..., POCKET..., FE...**
Receiver Type:	**RX..., RX BMS-1 / -2[4]..., RX MFS..., RX 14 / +[5]...**

The object declaration described above is in conformity with the requirements of the following documents:

EN ISO 13849-1	2008	EN 60950-1	2006
EN 62061	2005	EN 61000-6-2	2005
EN 13557	2008	EN 61000-6-4	2007
EN 14492	2009	EN 300 220	2007
EN 60204-32	2008	EN 301 489	2002
EN 60529	1991		

Authorized for the documentation: Mathias Friedl
Wiesnerstraße 20
4950 Altheim

Safety Category, Performance Level, SIL Level and additional information see Cover Sheet.

Notified Body: TÜV NORD CERT GmbH, Langemarktstr. 20, 45141 Essen
Type approval certificate
Nr. 4420513146703[1]
Nr. 4420513146704[2]
Nr. 4420513146705[3]
Nr. 4420513146701[4]
Nr. 4420513146702[5]

Langquaid, 24 October 2014

Daniela Hammerer
Managing Director

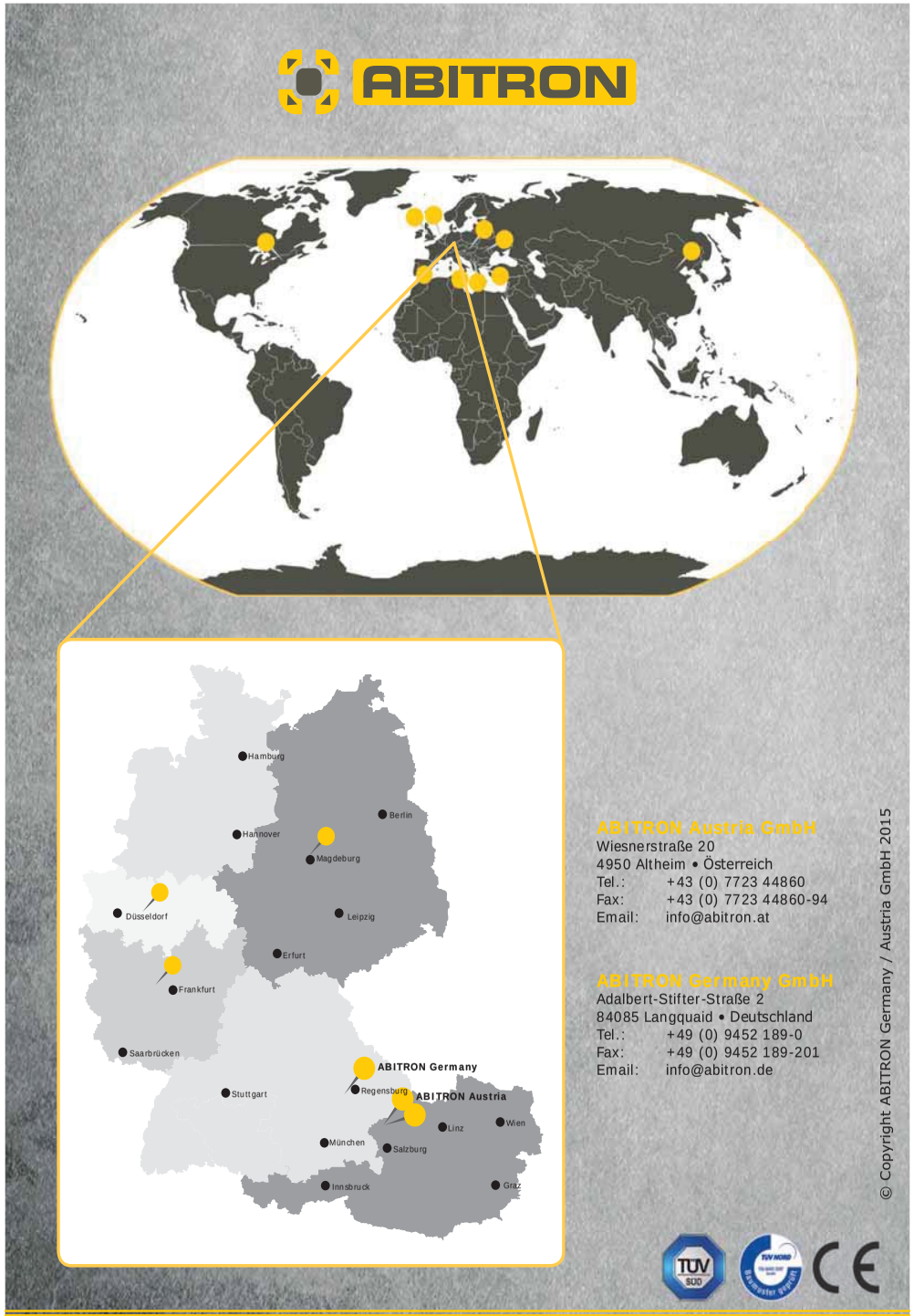

duma rent
www.duma-rent.com

11.6 RUD lifting accessories

Appendix

LIFTING POINTS

RUD®

Lifting Points for bolt and weld on

- User Instructions -

Respect the user instructions for the corresponding lifting points!

Before every use, please read the User Instruction of the Lifting Points carefully and make sure that you understand all substance. Improper use or care of this eyebolt can result in bodily injury or property damage and eliminates any warranty!

1 Application and warning information

Reference should be made to country specific statutory regulations and installation to be carried out by competent skilled persons only.

2 General information

- RUD-lifting points must not be used under chemical influences such as acids, alkaline solutions and vapours e.g. in pickling baths or hot dip galvanizing plants.
- The material construction to which the lifting point will be attached should be of adequate strength to withstand forces during lifting without deformations.
- The lifting points must be positioned on the load in such a way that non- permitted loads such as twisting or turnings will be avoided.
  - **For single leg lift,** the lifting point should be vertically above the center of gravity of the load.
  - **For two leg lifts,** the lifting points must be equidistant to/or above the center of gravity of the load.
  - **For three and four leg lifts,** the lifting points should be arranged symmetrically around the center of gravity in the same plane.
- Load symmetry
  The required WLL of the individual lifting point has to be calculated based on the following formula

$$W_{LL} = \frac{G}{n \times \cos ß}$$

WLL = Working load limit (kg)
G = load weight (kg)
n = number of load bearing legs
b = angle of inclination of the individual leg to the vertical

The number of bearing legs is:

	symmetrical	unsymmetrical
Two leg	2	1
Three/four leg	3	1

- Capability of temperature usage:
  Please observe corresponding user instruction of each part resp. see website www.rud.com
- The places where the lifting points are fixed should be marked with colour.
- When handling the lifting means (sling chain), no squeezing, shearing, catching and impact spots must occur.
- Damaging of the lifting means and lifting points by sharp corners has to be avoided.
- For the assembly of the lifting points, please follow the user instructions enclosed.
- Before installation and every use, inspect visually RUD lifting points, paying particular attention to any evidence of corrosion, wear, weld cracks and deformations. Please ensure compatibility of bolt thread and tapped hole (see *chapter 5 Inspection criteria*).

3 Lifting Points for weld on

- The welding should be carried out by an authorised welder acc. to EN 287-1.
- Effects of temperature
  The lifting points **for weld on**, types VLBS, LBS, VRBS, RBS, VRBK and RBK can together with the load (e.g. weld construction) be one-time low-stress annealed without reduction of WLL. Temperature < 600° C.
- Material of the welding block is S355J2+N (1.0577+N, St 52-3N, B.S. 4360.50D, AISI 1019)
- The connecting surfaces must be free from dirt, oil, colour, etc.
- Do not weld at the red or pink powder coated tempered load ring.
- The complete construction can be annealed stress free at <600°C without reduction of WLL.
- The welding spot has to be suitable for the corresponding force.
- The distance lugs assist in achieving the required root weld (approx. 3 mm).

ATTENTION:
By the arrangement of weld (continuous HV), the following requirements are fulfilled:
DIN 18800 for steel building prescribes:
At outdoor sites or in case of spezial danger of corrosion,the weld should only be designed as continuous, fillet welds. The HV weld at the VLBS, WPP, WPPH, VABH-W, VRBK assures a connection via the whole cross section of the material. This corresponds to a closed weld showing no signs of corrosion.

4 Lifting Points for bolt on

- The position to be designed in such a way that the introduced forces can be accepted by the basic material without deformations. German authorities recommend the following minimum bolting lengths:

  1 x M in steel (M = thread size, e.g. M 20)
  1,25 x M in cast iron
  2 x M in aluminium

HINT:
Please pay attention to the bolt-on surface and make sure that it is plane (at least where the lifting point will be attached) and perpendicular in regard of the thread. Blind holes must be drilled deep enough to make sure that the bolt-on surface will be bearing. Please engage the lifting points until bearing surface of the lifting points sits proper at bolt-on area. If the lifting points are designated to stay permanent at the load, make sure that they will be tightened with the required torque moment stated in the user instruction.

- With shock loadings, twisting or vibrations, especially with through bolts and nuts, an unintentional dismounting may occur. Possibilities of securing: liquid means such as Loctite or WEICONLOCK (respect manufacturer's prescriptions) or form closed bolt securing such as crown nut with key, counter nut, etc.
- Secure in general all lifting points which are installed permanently, e.g. with glue.
- With light metals, non ferrous heavy metals and grey cast, the thread arrangement has to be chosen in such a way that the WLL of the thread corresponds with the respective basic material.
- RUD will not accept any warranty for the use of any bolts not supplied by RUD! Minimum quality for the base material "steel" has to be 1.0037 (St 37).

5 Inspection criteria

After fitting, an annual inspection or sooner if conditions dicate should be undertaken by a competent person examining the continued suitability (at least once a year). Also after damage and special occurrences:

- Ensure a tight bolt seat (possibly examine torque)
- Ensure that lifting point is complete
- Complete indications of WLL and manufacturer
- Deformations at bearing parts such as body, suspension bracket or latch
- Mechanical damages such as serious notches, especially in high stress areas
- Reductions of cross section by wear > 10 %
- Strong corrosion (pitting)
- Cracks at bearing parts
- Cracks or other damages at the weld (with lifting points for weld on)
- **Correct bolt size, bolt quality and thread length**
- Function and damage of bolts as well as bolt thread
- With rotating lifting points: easy, jerk free turning between upper and lower part must be assured
- Assembly or fitting of different bolt lengths with types VWBG-V or WBG-V only to be carried out by the manufacturer.
  For the user it is forbidden to disassemble the ball bearing of VWBG-V, VWBG, WBG-V, WBG, PP and WPP.
- With types PP, WPP, VWBG-V, VWBG, WBG-V and WBG check maximum slackness between upper and lower part below, size „s" – refer to table. In case the maximum slackness has been exceeded, these types must be taken out for service or replacement.

Type	Slack „s"
WPP / PP-..-0.63t to 2.5t	max. 1.5 mm
WPP / PP-..-4t to 8t	max. 2.5 mm
VWBG-V 0.3 to 0.45	max. 1.2 mm
VWBG-V 0.6 to 2.0	max. 1.5 mm
VWBG-V 3.5 to 5.0	max. 3.0 mm
VWBG 8 to 40	max. 4.0 mm

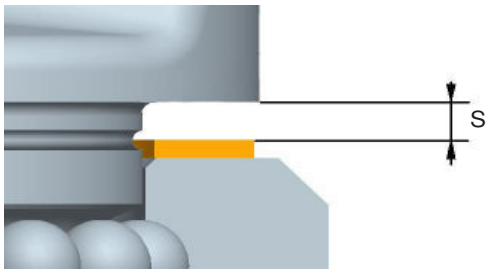

Pic. 1: Distance „s" between upper and base part

11.7 Accessories documentation

Appendix

11.7.1 TEUPEN Operator Protection

In order to protect the operator in the working basket, a “Teupen operator protection system” can be installed.

Description of the possible operating modes:

TOP1: (machine stops)

If the signal wire is tripped, then all machine movements are stopped.

An acoustic signal sounds automatically and an LED warning light flashes until the signal wire is re-inserted or the machine is shut off.

TOP2: (machine stops and travels backwards)

If the signal wire is tripped, then all machine movements are stopped and the machine performs one last, brief reverse movement.

An acoustic signal sounds automatically and an LED warning light flashes until the signal wire is re-inserted or the machine is shut off.

DANGER

Risk of crushing!

Serious crushing injuries can occur when operating the machine from the working basket.

- When operating the controller, never lean over the fixtures of the TEUPEN operator protection system.
- Always operate the controller from a position above the red signal wire between the system’s fixtures.

Fig. 271

If the TEUPEN operator protection system has been tripped, proceed as follows:

	You are not trapped and can move to safety	You are trapped and cannot move to safety
1.	Keep calm	Keep calm
2.	Free yourself from the restricted position	Call for help
3.	Insert the fastening bolt ((Fig.271/2) of the signal wire into the retainer ((Fig.271/1)	Have the second person on the ground rescue you
4.	Push the button ((Fig.271/3)	
5.	Continue operation and move out of the danger zone	